外箱:440x440x245mm

SWANSON

www.globo-lighting.com

GLOBO
LIGHTING

SWANSON

www.globo-lighting.com

GLOBO
LIGHTING

GLOBO
LIGHTING

SWANSON

GLOBO
LIGHTING

GLOBO
LIGHTING

SWANSON

SWANSON

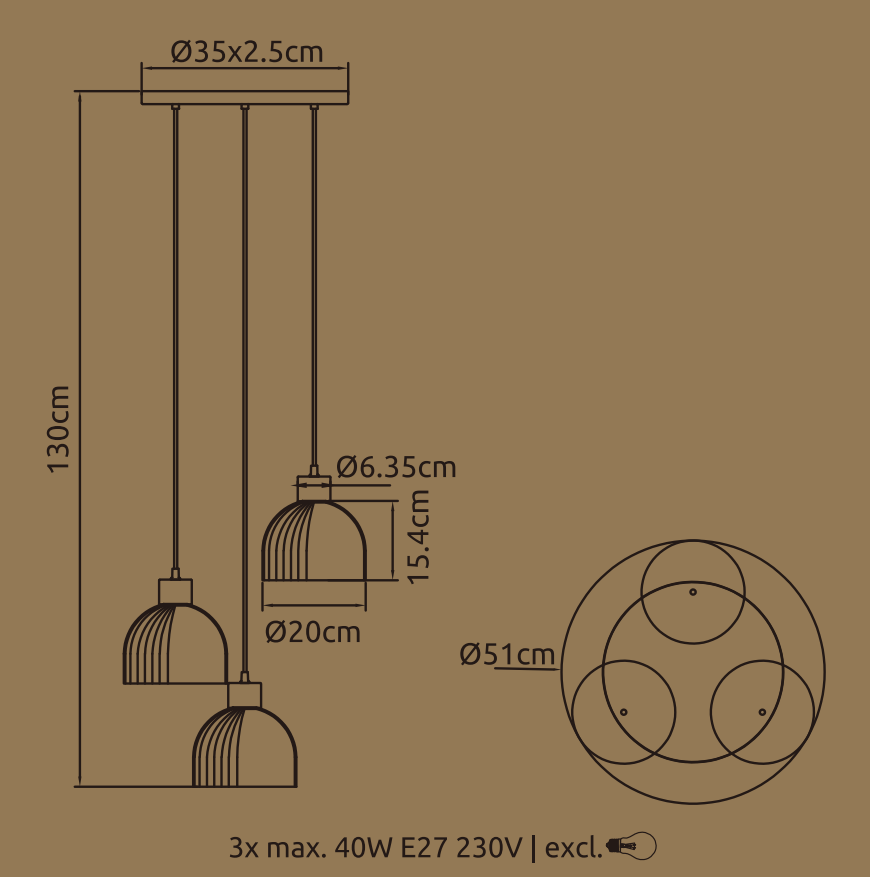

3x max. 40W E27 230V | excl.

GLOBO
LIGHTING

(D) Hängeleuchte; (GB) Pendant lamp; (F) Suspension; (I) Sospensione;
(E) Lámpara de techo; (HR) Viseca lampa; (BIH) Viseca lampa; (SLO) viseče svetilo;
(SRB) Visilica; (FIN) Riippuvalaisin; (DK) Hængelampe; (IS) Hangandi ljós;
(P) Suspensão; (BG) Пендел; (N) Hengelampe; (LV) Griestu lampa;
(S) Hänglampa; (CZ) Závěsné svítidlo; (RUS) Подвес; (H) Függeszték;
(LT) Pakabinamas šviestuvas; (SK) Závesné svietidlo;
(NL) Hanglamp; (TR) Asma lamba; (EST) Rippvalgusti;
(PL) Lampa wisząca; (RO) Suspensie; (GR) Κρεμαστό φωτιστικό οροφής;

CE EAC UK CA
88600
ECOPONTO AZUL
PAP 22 CARTA
Al Azul
PAP 20 CARTA

15979-3HRW

9 007371 592999

Importer: Globo Handels GmbH,
Gewerbestraße 3,9184 St. Peter
AUSTRIA

office@globo-lighting.com
www.globo-lighting.com

Made in P.R.C.

GLOBO
LIGHTING

15979-3HW
1PC