58481S_127x350x65mm

250g牛卡+BE120g+1C

270 lm	source
150 lm	output

- 3W LED incl.
- 2800 Kelvin
- 4000 Kelvin
- 6500 Kelvin
- 20000h Lifetime
- 10.000x ON OFF
- Input 220-240V~ 50/60Hz
- Output 5V
- -20°C – +40°C
- dimmable
- Hg < 0.0001mg
- Beam angle 180°
- CRI≥80

217.8mm
17.7mm

LED ZZZ LED

5V USB-Charger compatible

adapter excl.

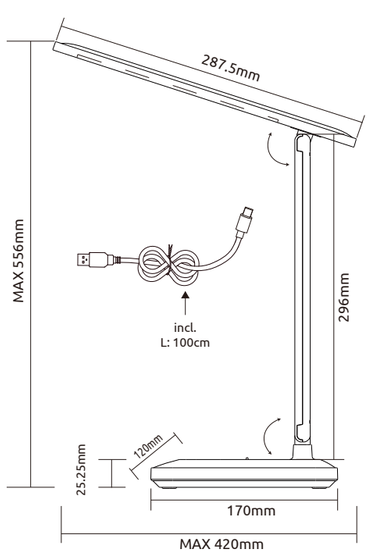

(D) LED Tischleuchte; **(GB)** LED table lamp;
(F) Lampe à poser LED; **(I)** Lampada Tavolo a LED;
(E) Lámpara de sobremesa LED; **(HR)** LED stolna lampa;
(BIH) LED stolna lampa; **(SLO)** LED namizna svetilka;
(SRB) LED stona lampa; **(FIN)** LED-pöytävalaisin;
(DK) LED bordlampe; **(IS)** LED borðlampi;
(P) Candeeiro de mesa LED; **(BG)** LED настолна лампа;
(N) Bordlampe med LED; **(LV)** LED galda lampa;
(S) LED-bordslampa; **(CZ)** LED stolní svítidlo;
(RUS) Настольный светильник LED; **(H)** LED asztali lámpa;
(LT) LED stalo šviestuvas; **(SK)** LED stolové svietidlo;
(NL) LED tafellamp; **(TR)** LED masa aydınlatması;
(BY) LED настолна лампа; **(EST)** LED Laualamp;
(PL) LED lampa stołowa; **(RO)** Veioza LED;
(GR) Επιτραπέζιο φωτιστικό LED

58481S

Importer: Globo Handels GmbH,
Gewerbestraße 3,9184 St. Peter
AUSTRIA

office@globo-lighting.com
www.globo-lighting.com

Made in P.R.C.

9 007371 531622

85631