59038N: 37x12x108cm

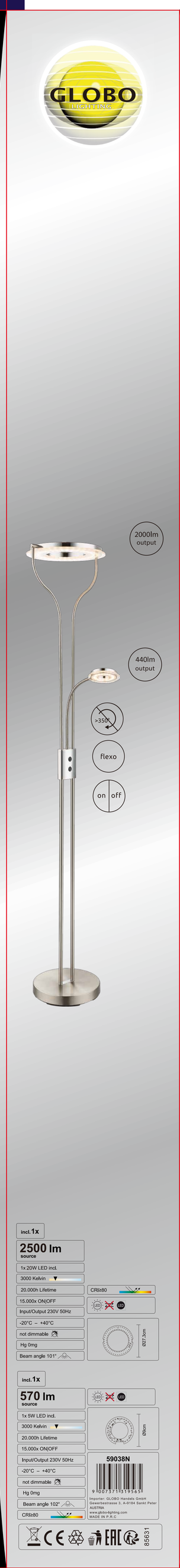

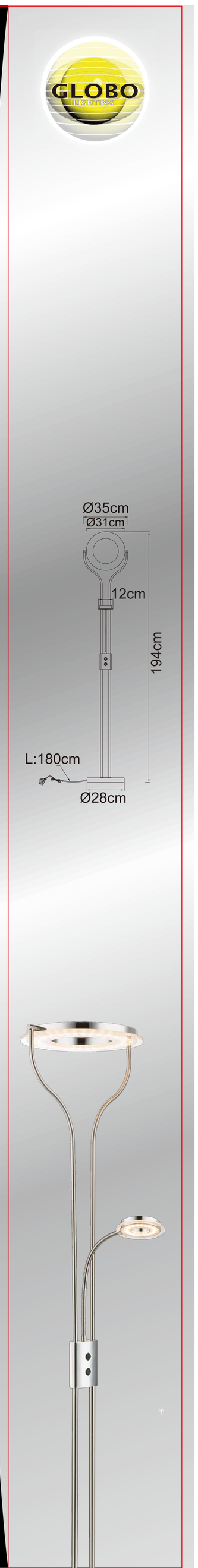

GLOBO LIGHTING

GLOBO
ITEM NO.:59038N
Carton NO.:
QTY: 1 PC

GLOBO article no.:59038N
QTY: 1 PC
N.W.: 7.27 KGS
G.W.: 8.78 KGS
MEAS:37x12x108CM
C/NO.: