GLOBO
FAN

0430W/0430S
0430SA/0430OG

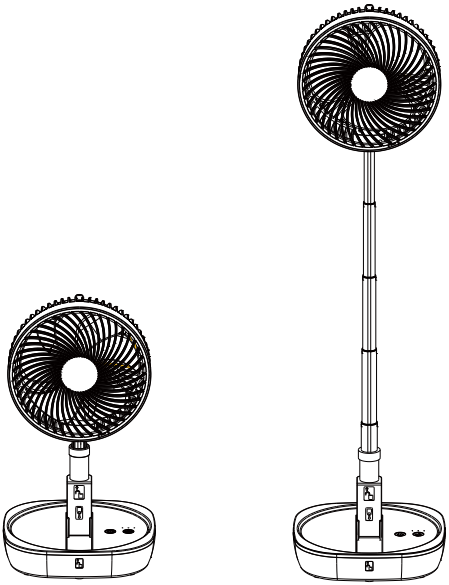

DC5V⎓2A 6W

GLOBO Handels GmbH
Gewerbestrasse 3
A-9184 Sankt Peter
Austria
www.globo-lighting.com
office@globo-lighting.com

CE III

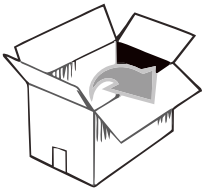

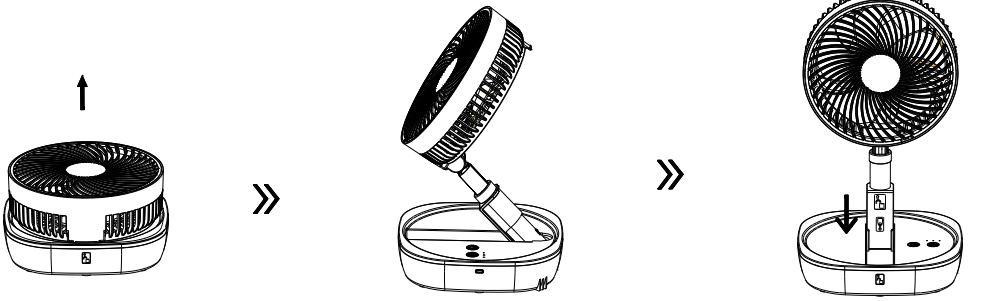

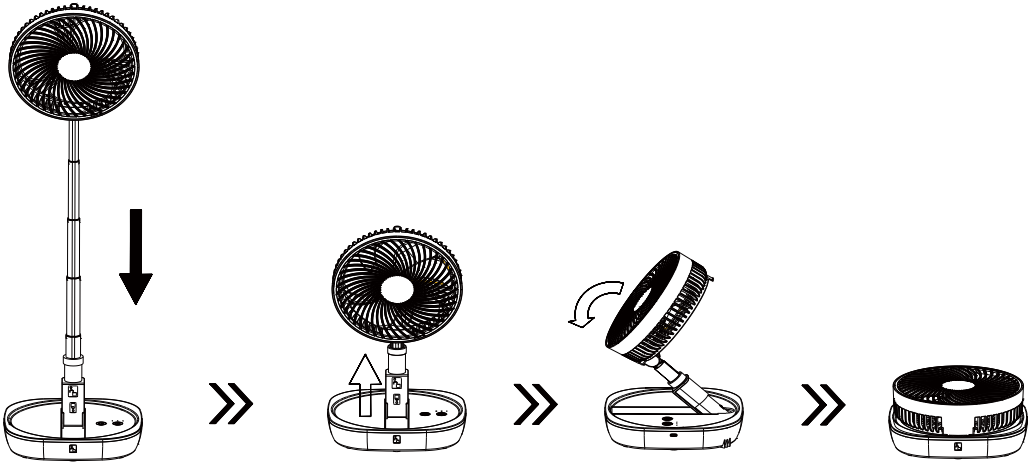

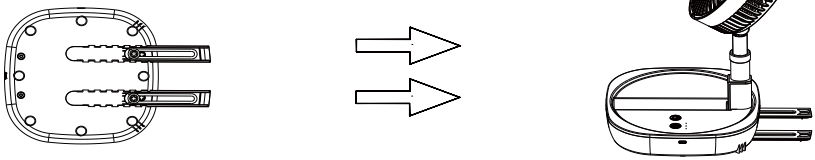

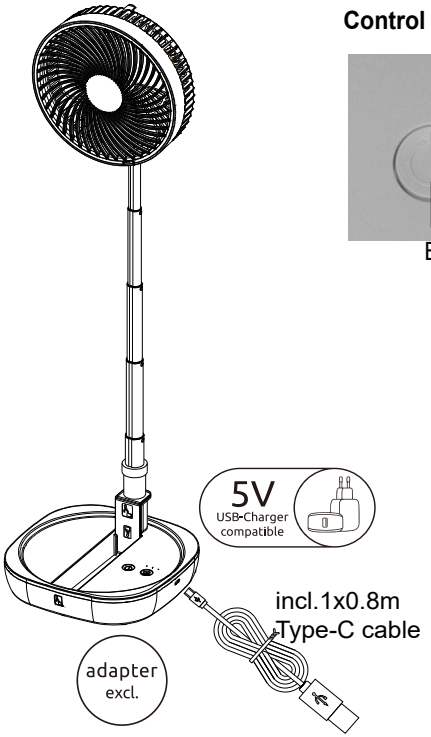

Control Panel

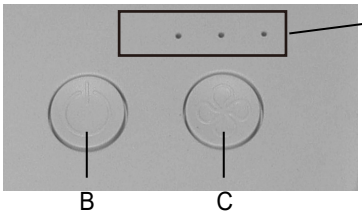

A	Indicator Lights
B	Power On / Off Button
C	Fan Speed Button

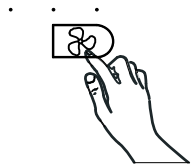

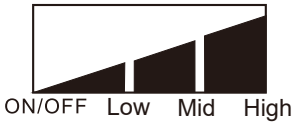

Low-1200 rpm/min
Mid-1400 rpm/min
High-1600 rpm/min

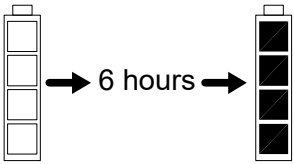



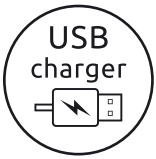

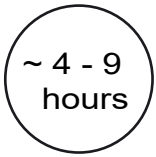

1x3.7V 3600mAh Li-ion battery incl.

AKKU DATA

LI-Ion 18650 RECHARGEABLE

*Manufacturer:ZHUHAI GREAT POWER ENERGY CO., LTD.
Adress:(BUILDING A,WORKSHOP) NO.2 XINQING FIFTH ROAD,
JING'AN TOWN, DOUMEN DISTRICT, ZHUHAI CITY, GUANGDONG PROVINCE,P.R.China
Model: GP-18650-1S2P 18650 Li-ion 3600mAh 3,7V

SAFETY INSTRUCTIONS



Anleitung zum Akkuwechsel / Battery replacement instruction

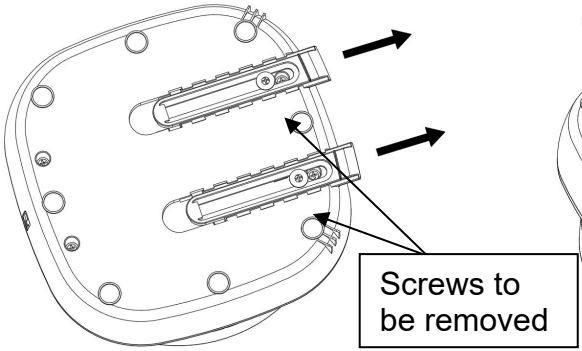

Figure 1

φ6 mm Phillips screwdriver

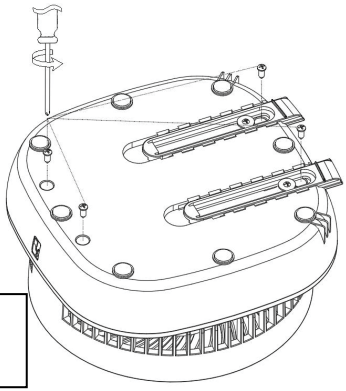

Figure 2

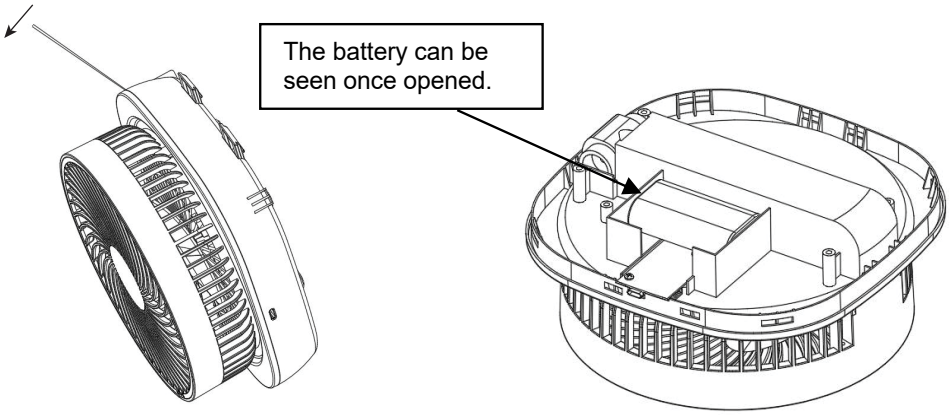

Figure 3

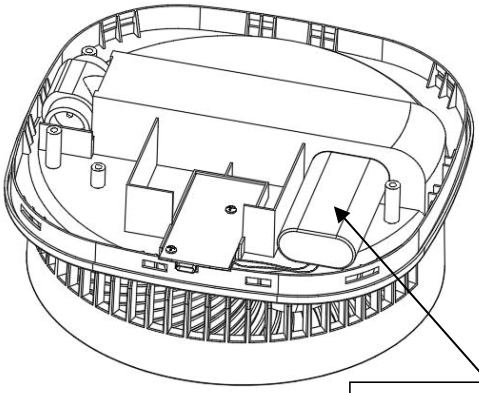

Figure 4

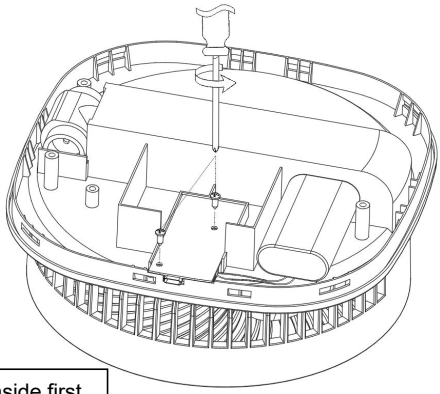

Figure 5

Set the battery aside first.

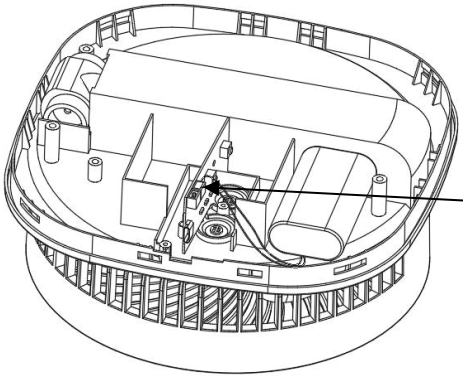

Figure 6

Flip the PCB board, then remove the battery terminal from the PCB board to take out the battery.

Figure 7

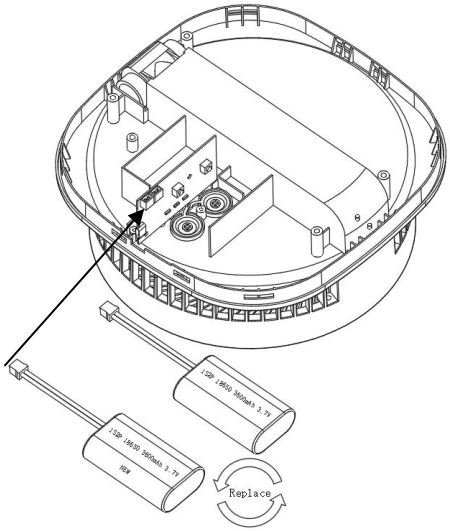

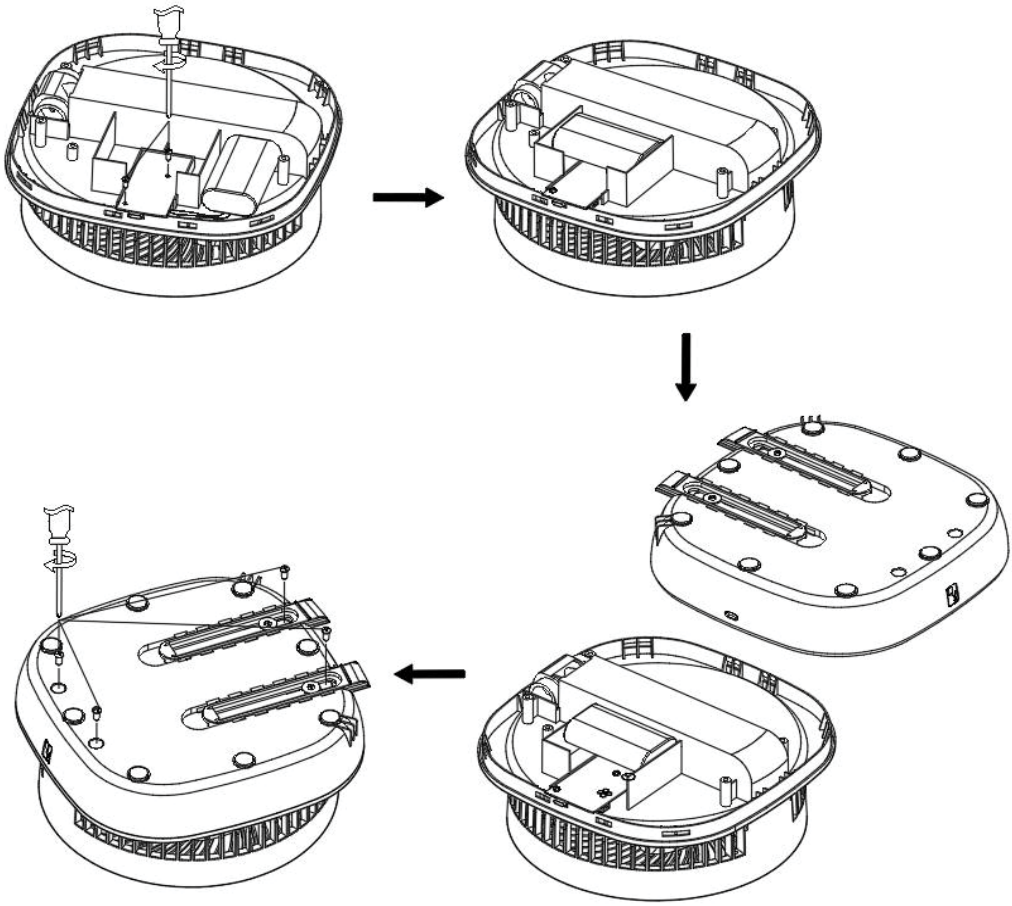

Figure 8