GLOBO
FAN

0432W/0432S/0432SA

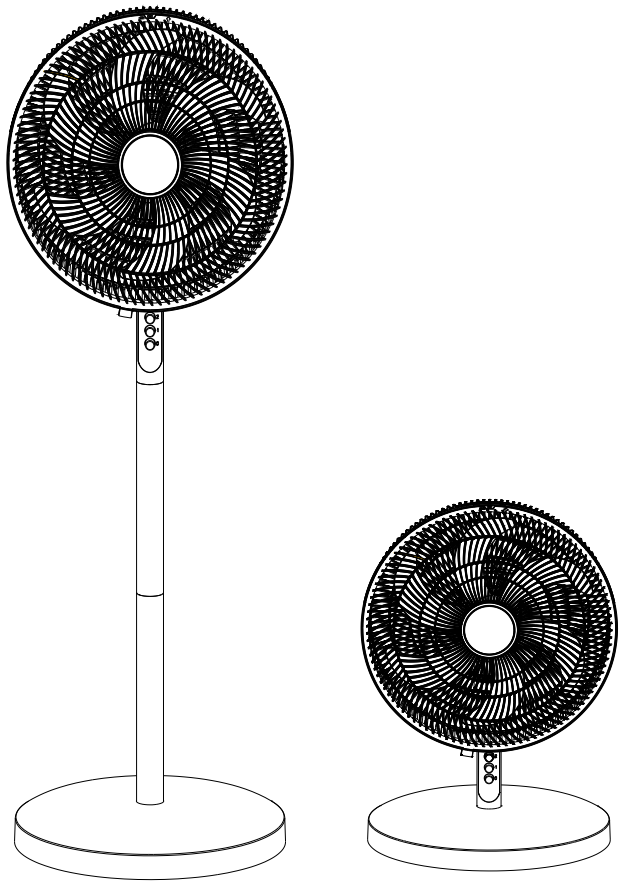

220-240V~50/60Hz 45W

GLOBO Handels GmbH
Gewerbestrasse 3
A-9184 Sankt Peter
Austria
www.globo-lighting.com
office@globo-lighting.com

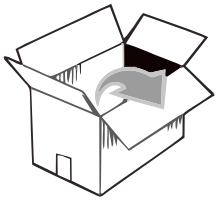

Option1

1

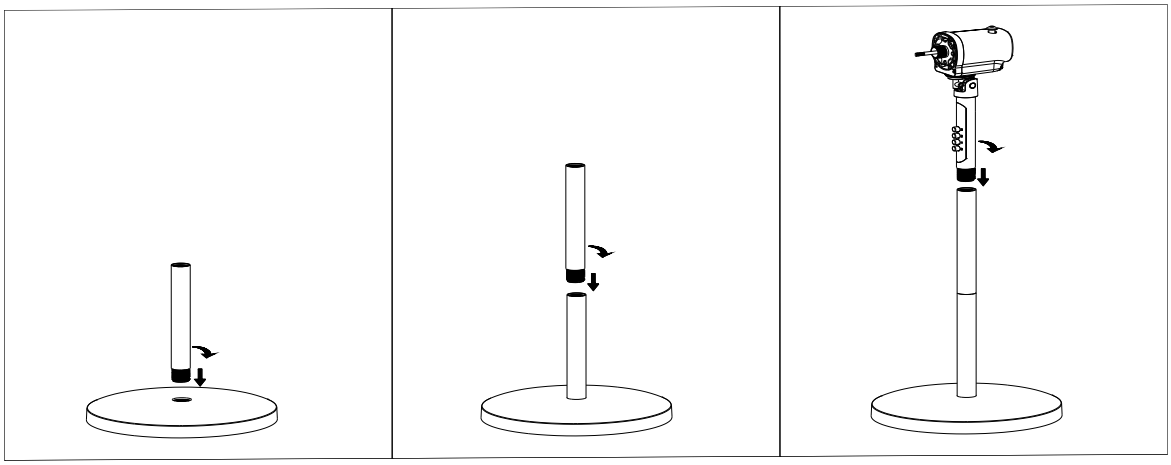

2

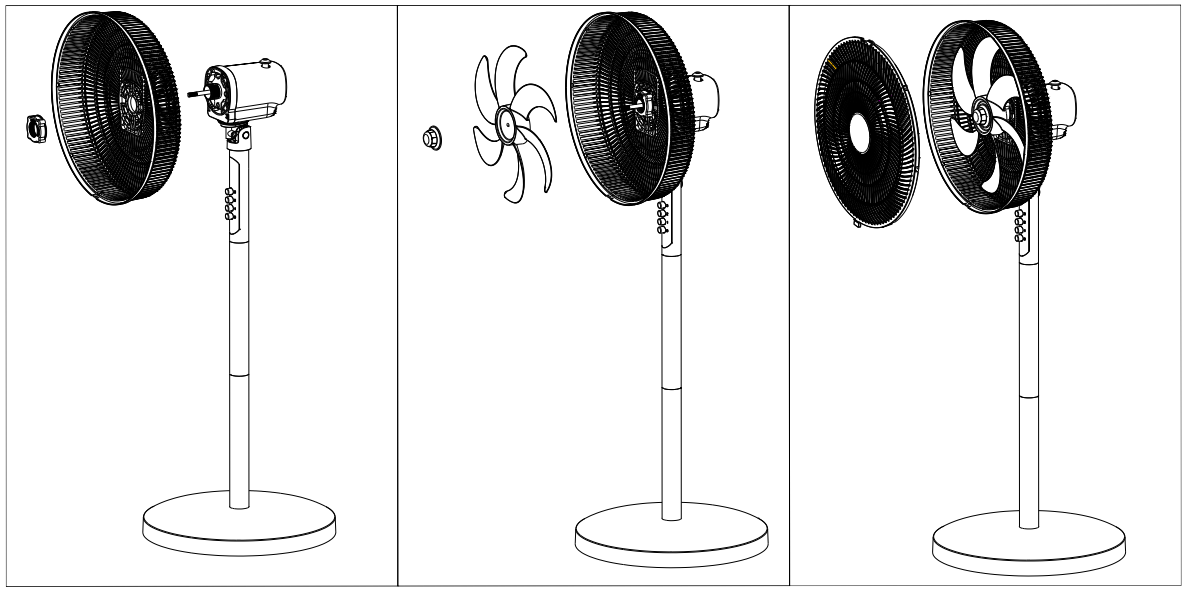

3

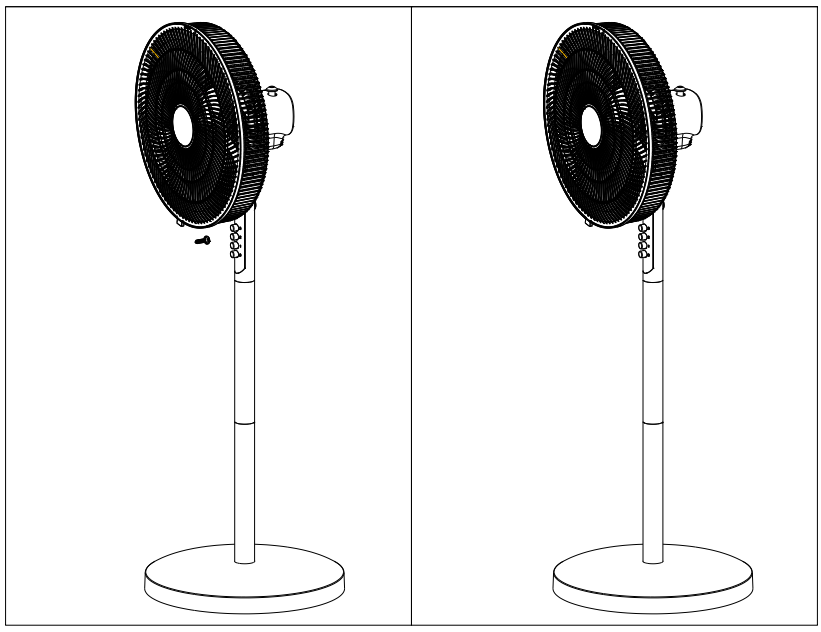

Option 2

1

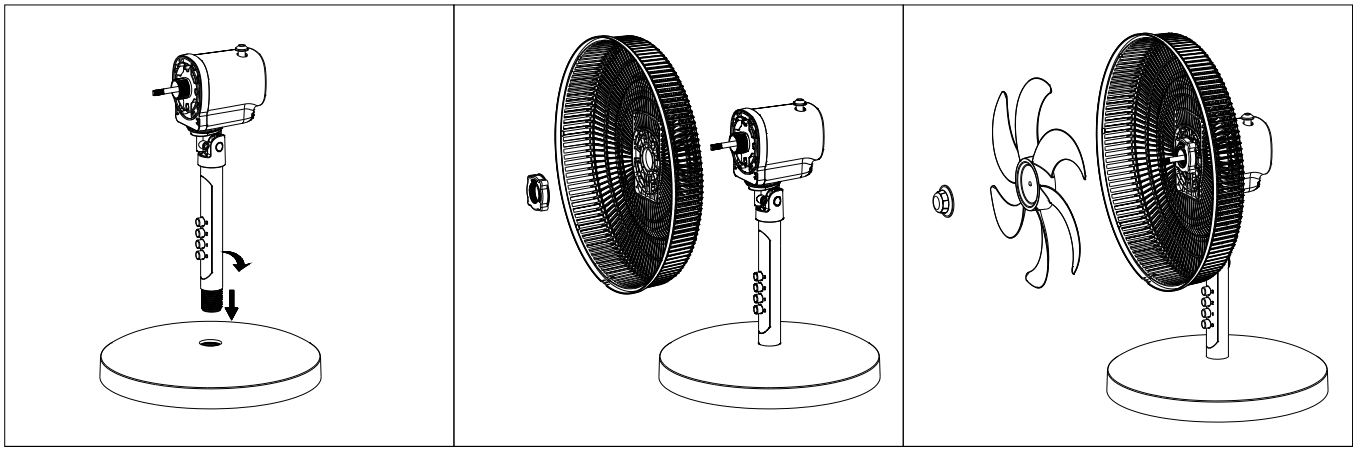

2

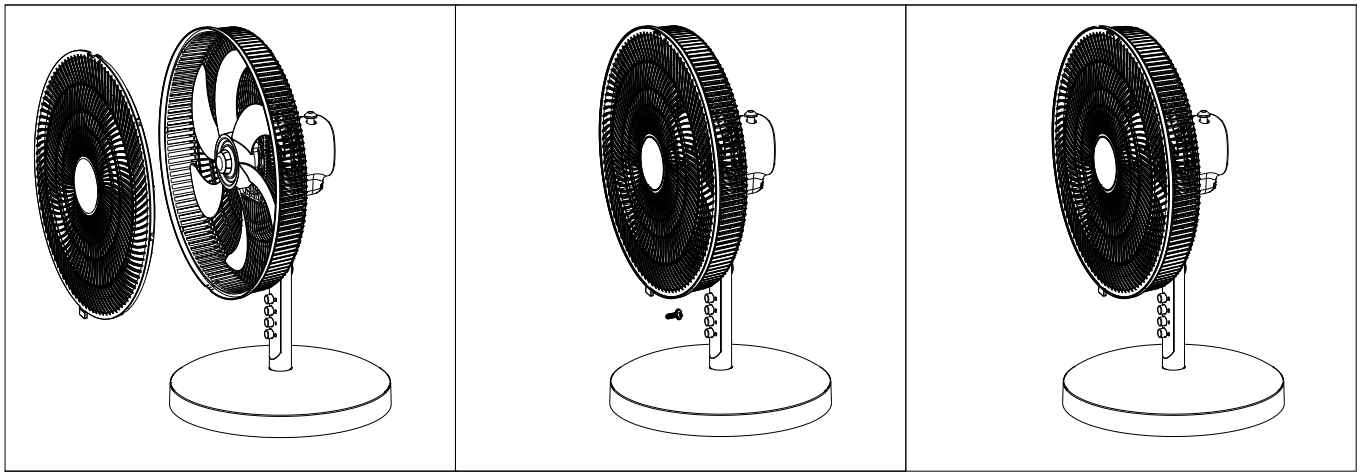

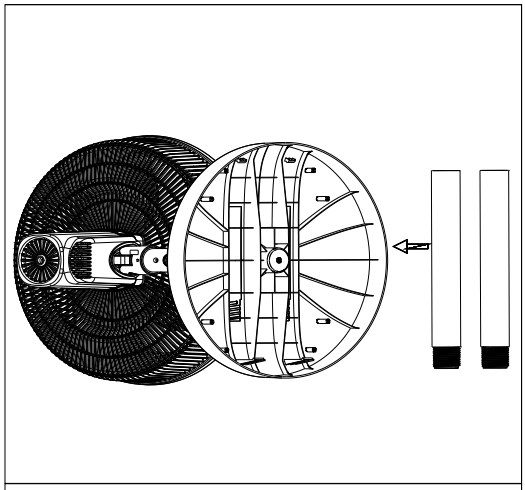

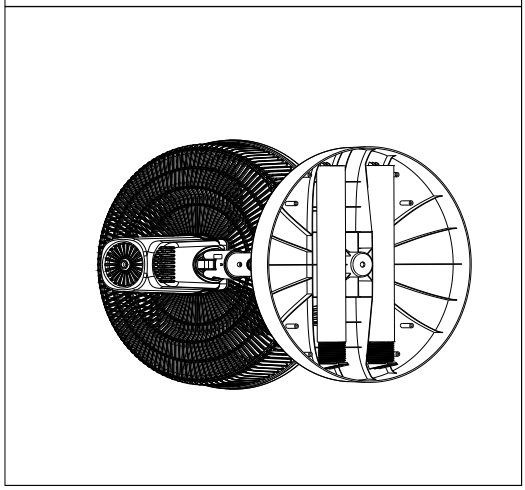

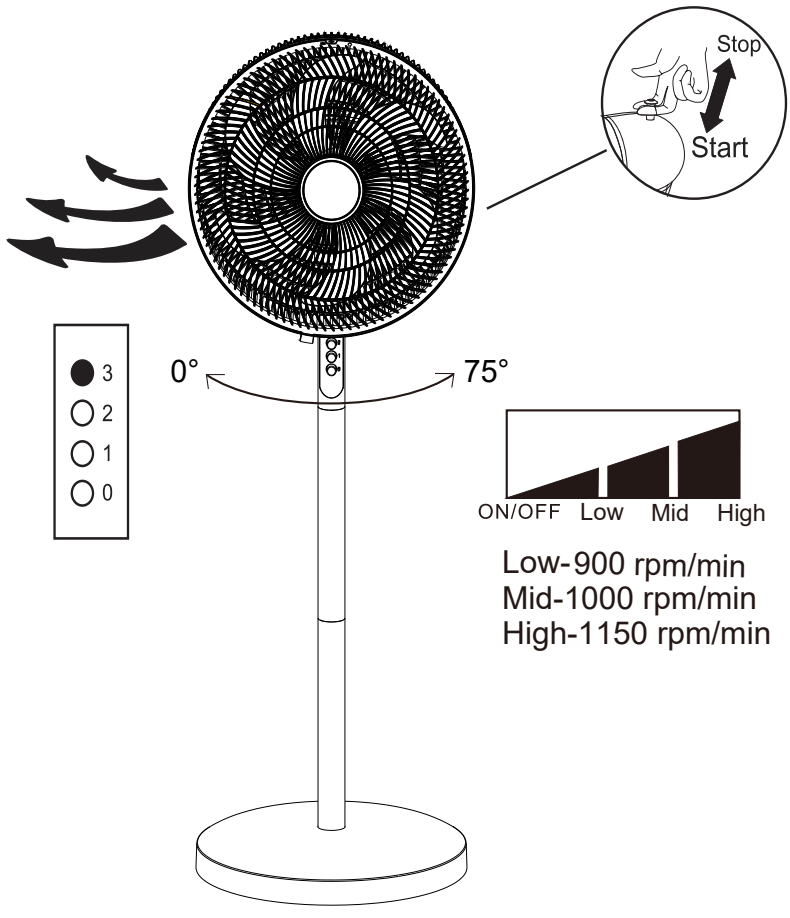
Stop
Start
3
2
1
0
0°
75°
ON/OFF
Low
Mid
High
Low-900 rpm/min
Mid-1000 rpm/min
High-1150 rpm/min