GLOBO
FAN

0433W/0433S

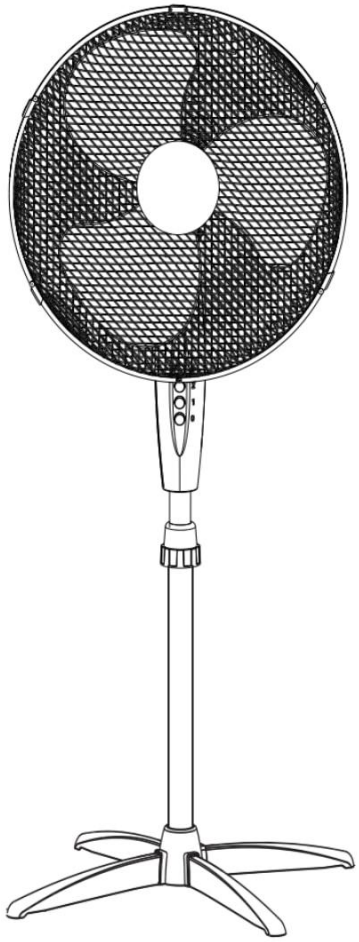

220-240V~50/60Hz 45W

GLOBO Handels GmbH
Gewerbestrasse 3
A-9184 Sankt Peter
Austria
www.globo-lighting.com
office@globo-lighting.com

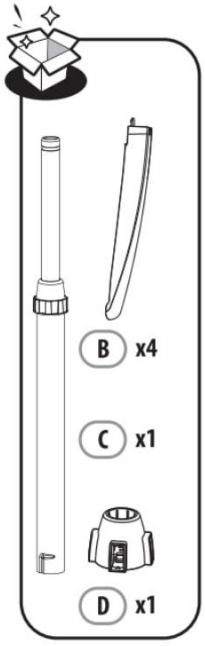



1

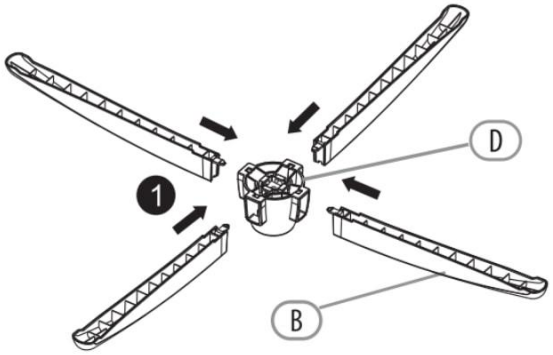

2

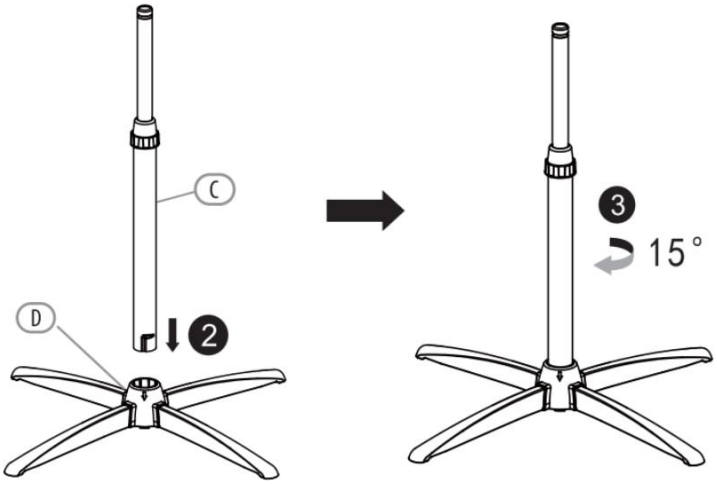

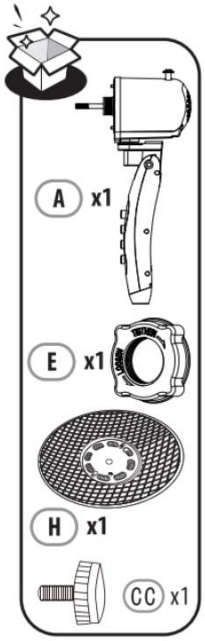

3

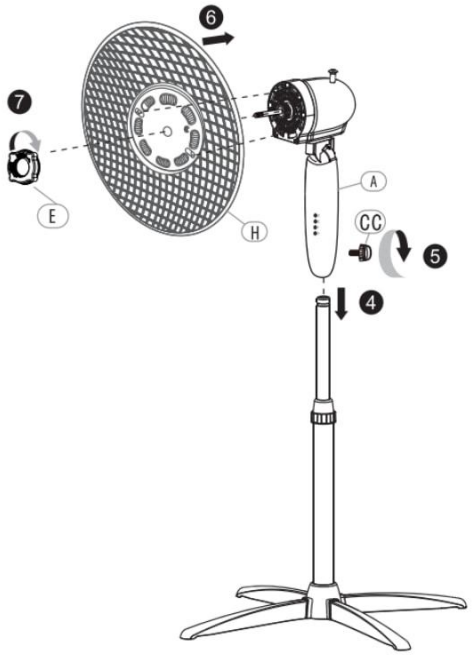

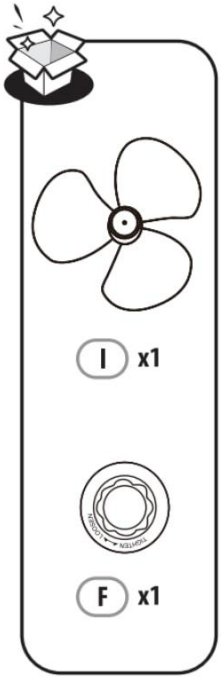



4

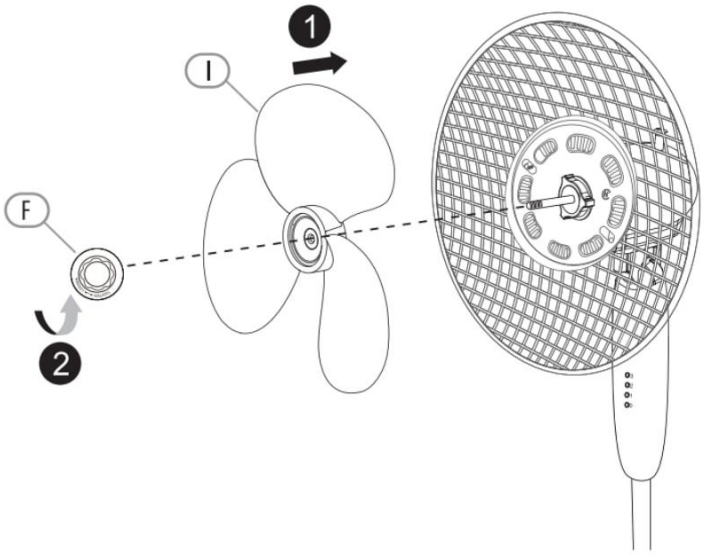

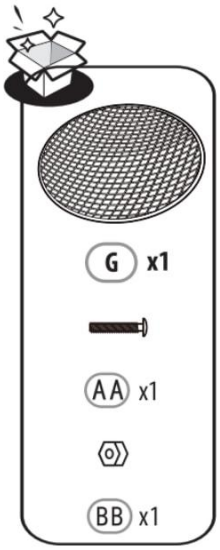

5

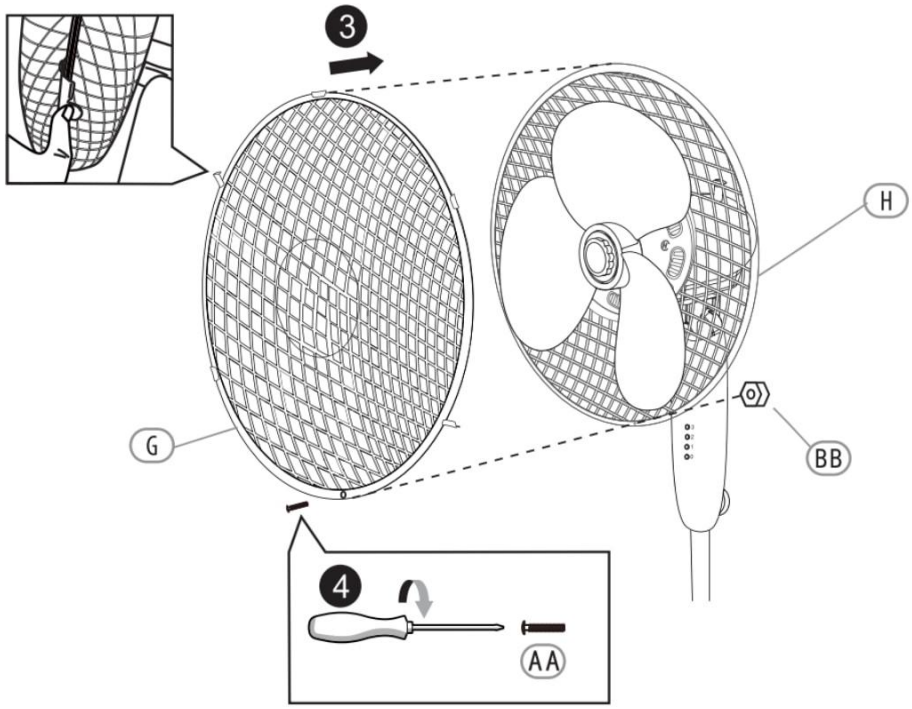

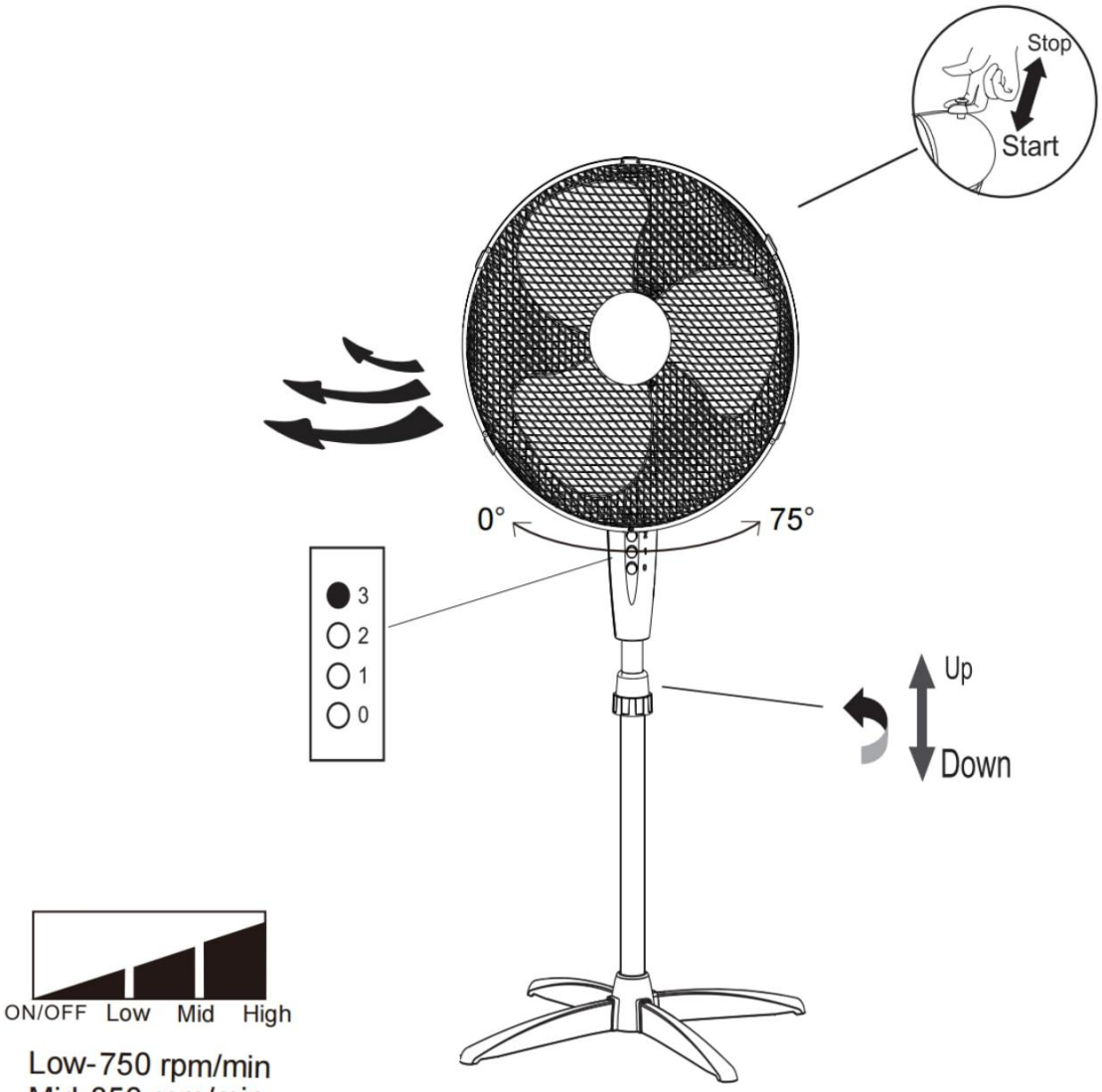

Low-750 rpm/min
Mid-850 rpm/min
High-1150 rpm/min