GLOBO
FAN

0434W/0434S

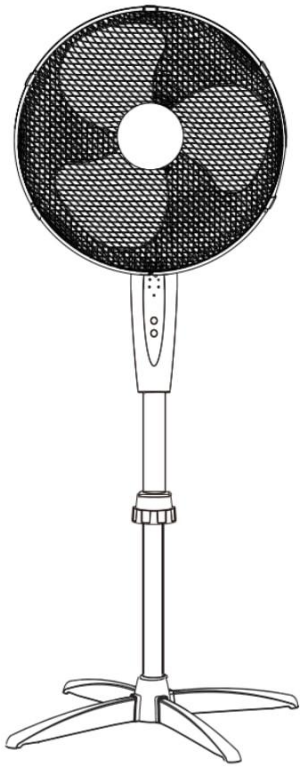

220-240V~50/60Hz 45W

GLOBO Handels GmbH
Gewerbestrasse 3
A-9184 Sankt Peter
Austria
www.globo-lighting.com
office@globo-lighting.com



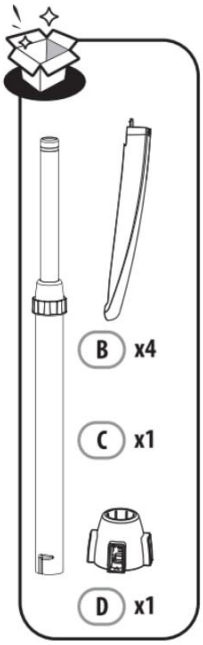



1

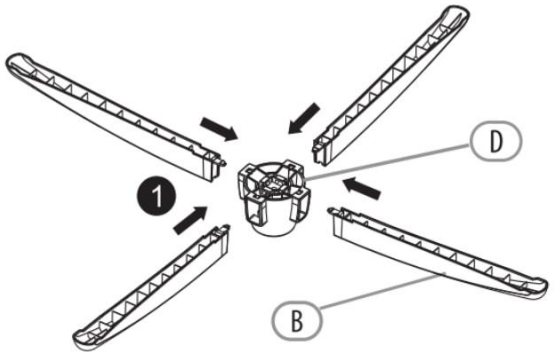

2

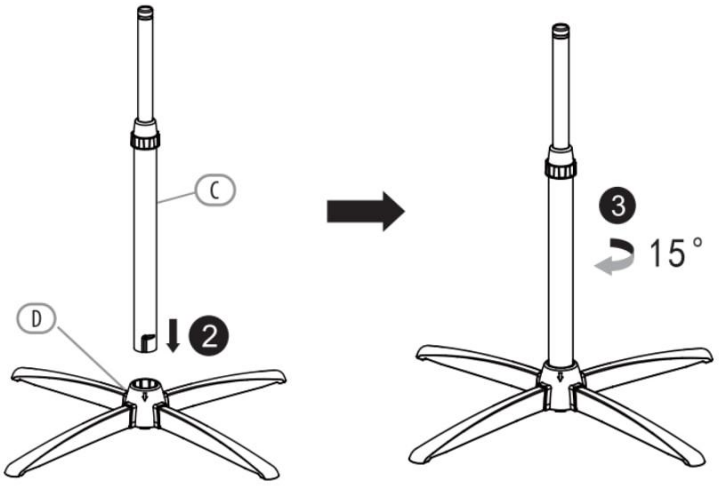

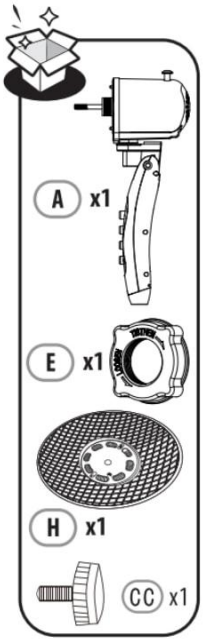

3

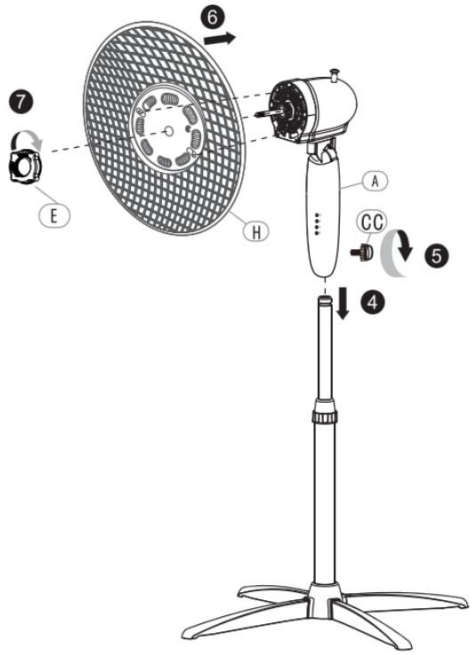

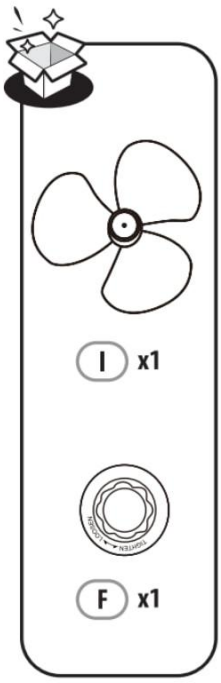

4

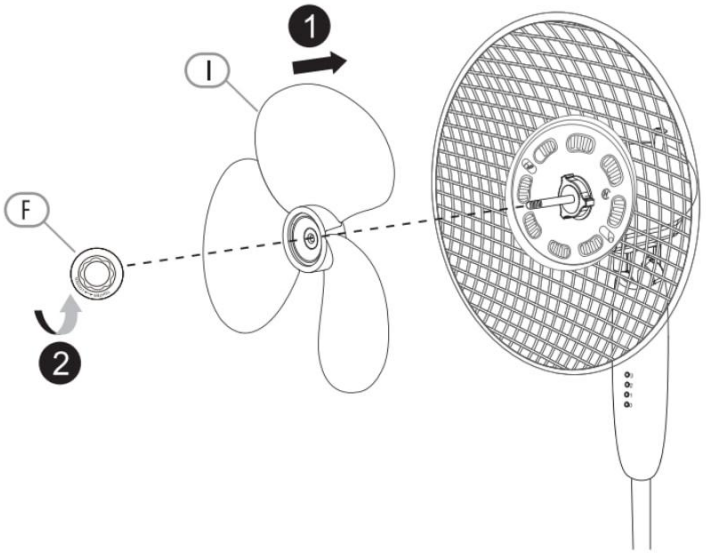

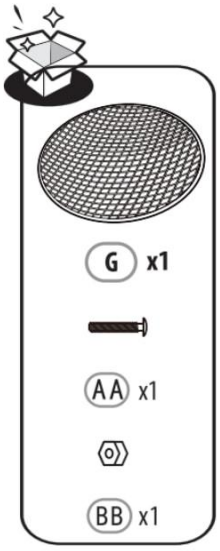

5

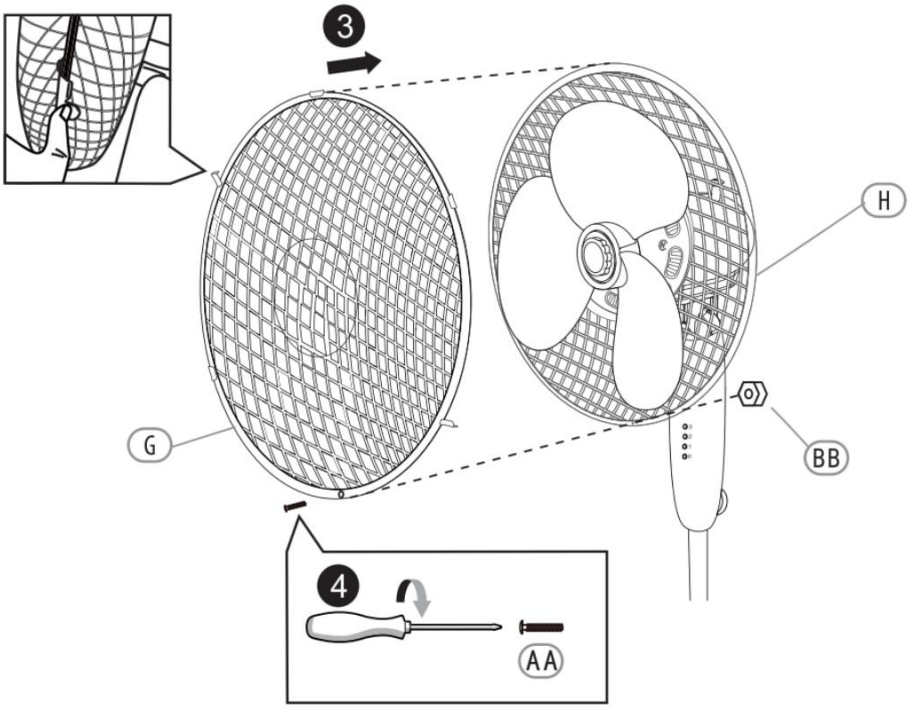

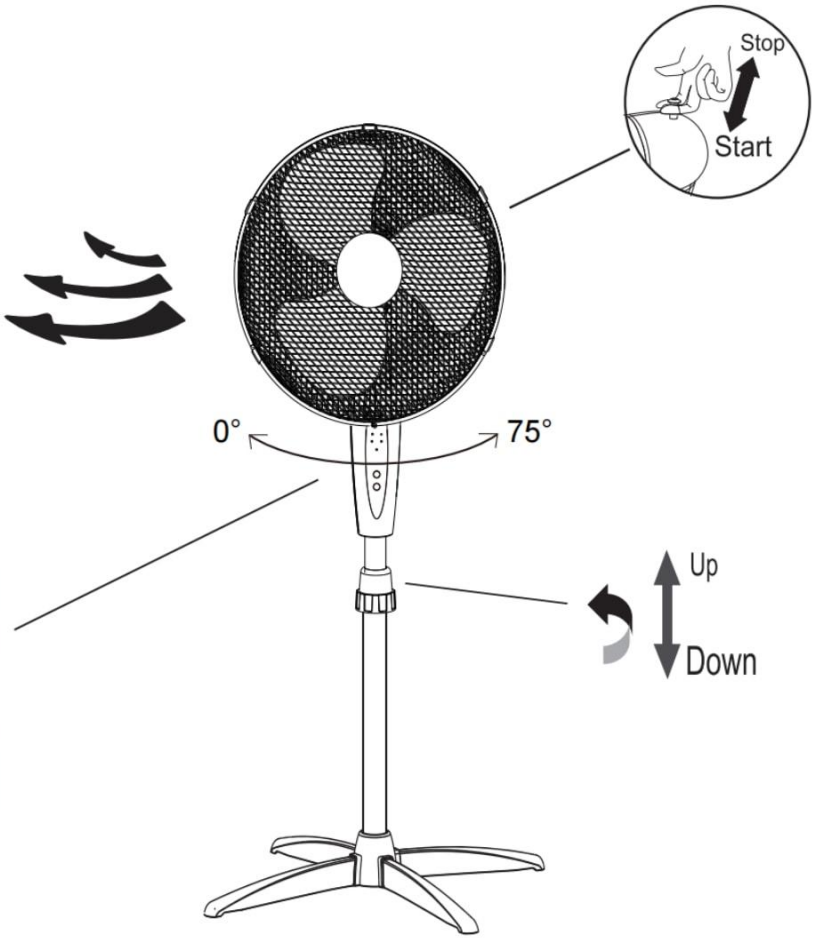

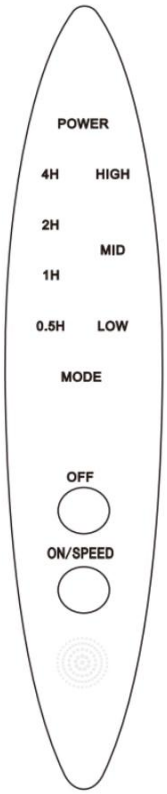

Speed

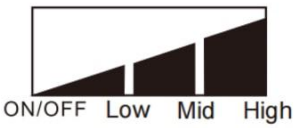

Low-750 rpm/min
Mid-850 rpm/min
High-1150 rpm/min

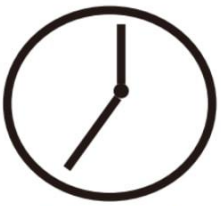

0.5-7.5H

Timer

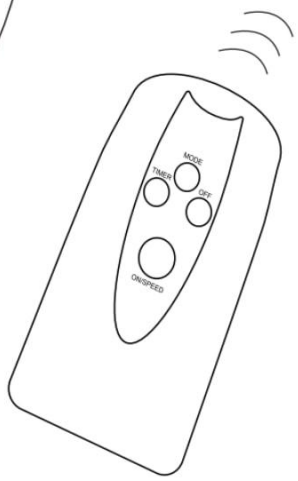

Mode

Normal The indicator light will glow red in this mode.

Natural — **Sleep**

(In this mode the fan speed varies randomly between low/medium/high giving the effect of natural breeze.) The indicator light will glow green in this mode.

(the fan simulates a soft, gentlebreeze of air, suitable for resting.) The indicator light will not glow in this mode.

Battery:2xAAA1.5V excl.