GLOBO
LIGHTING

www.globo-lighting.com

14997-3H

A

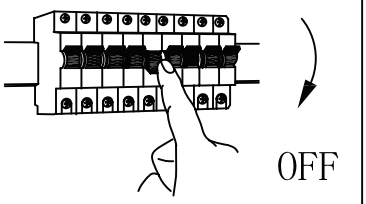

B

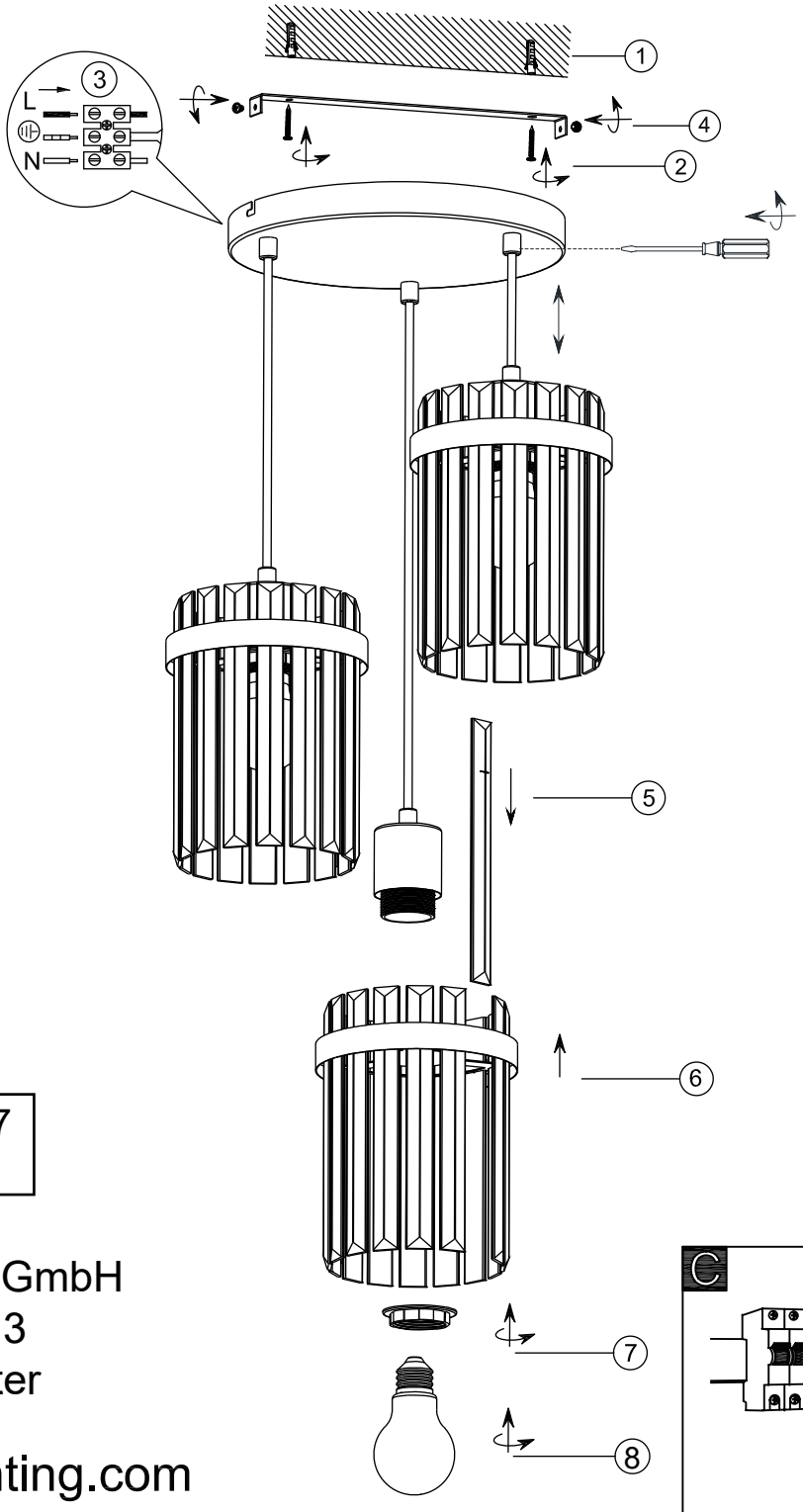

3x MAX 40W E27
230V~ 50Hz

C

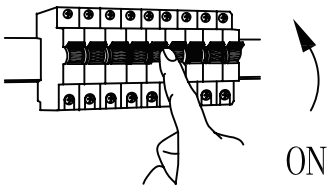

GLOBO Handels GmbH
Gewerbestrasse 3
A-9184 Sankt Peter
AUSTRIA
www.globo-lighting.com
office@globo-lighting.com