

GLOBO
LIGHTING

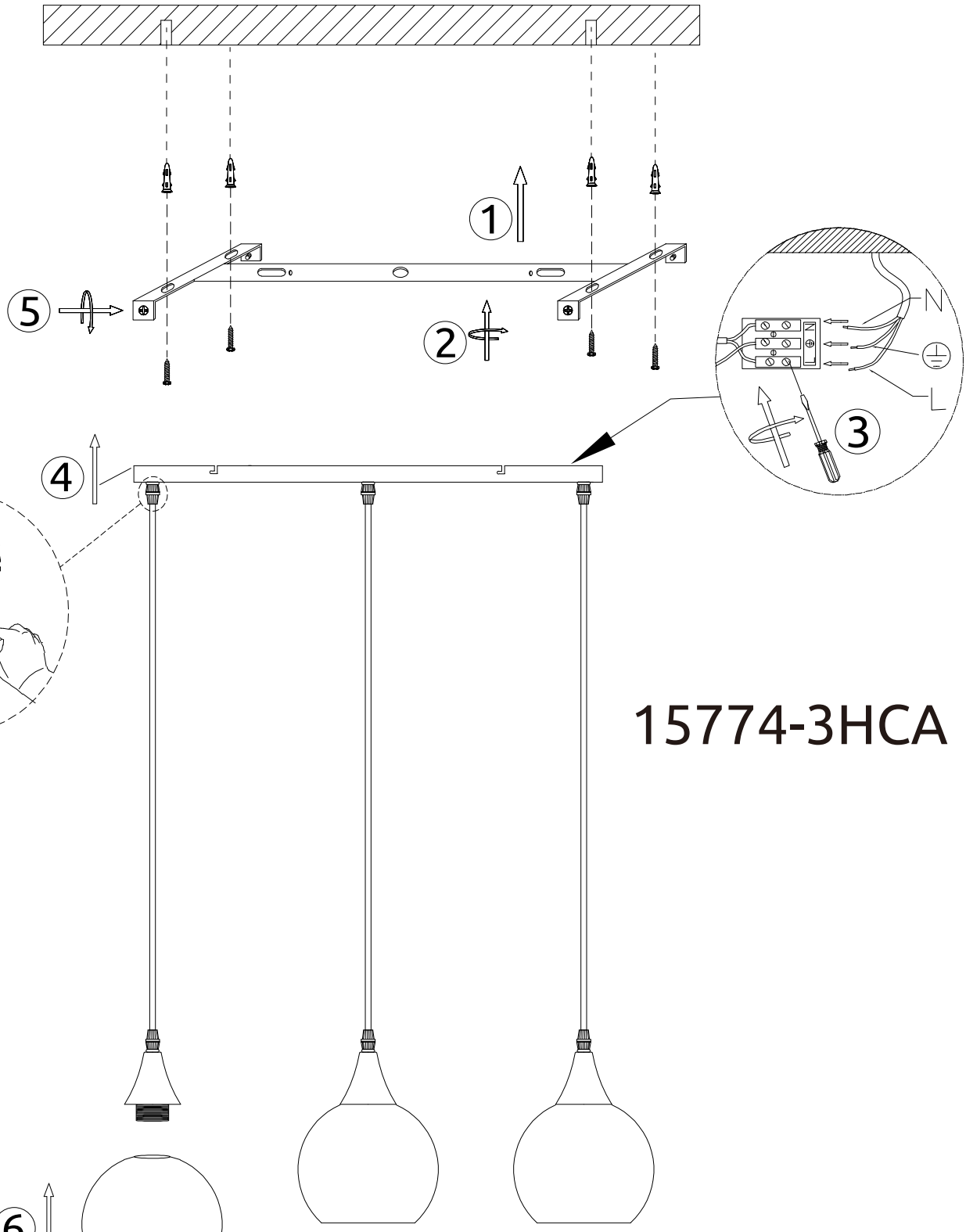

15774-3HCA

GLOBO Handels GmbH
Gewerbestrasse 3
A-9184 Sankt Peter,Austria
www.globo-lighting.com
office@globo-lighting.com

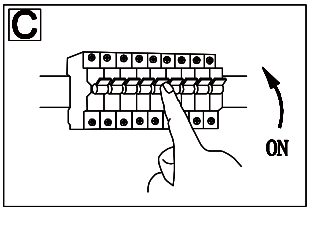

3x MAX 40W E27
230V~ 50Hz