GLOBO
LIGHTING

A

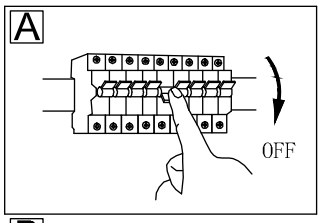

B

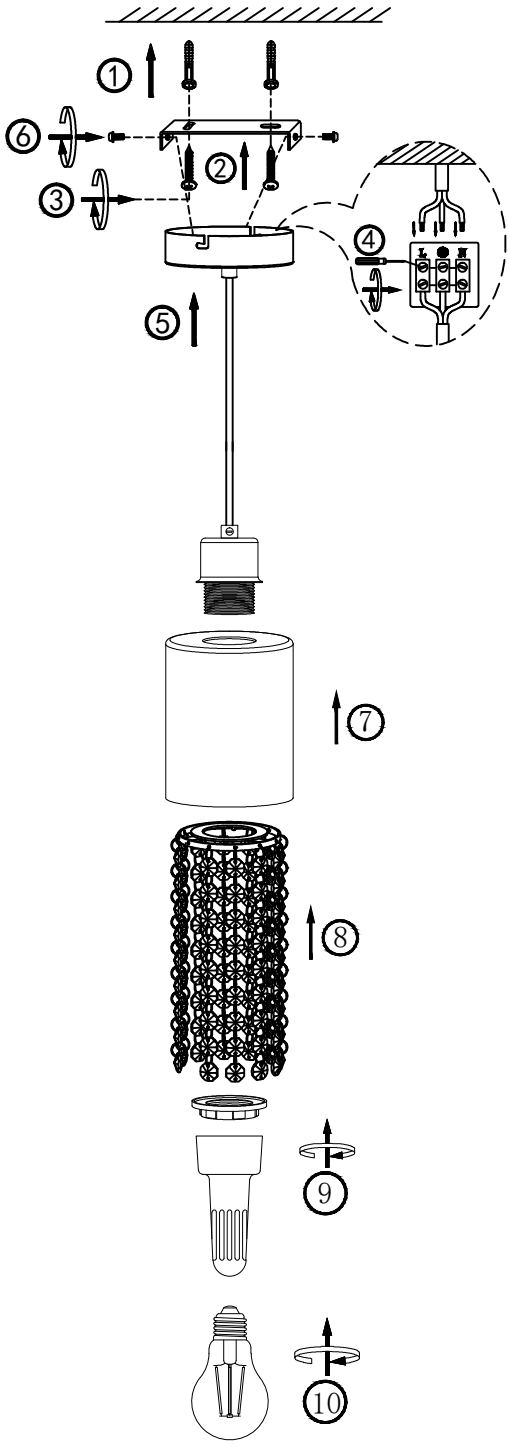

15799H

C

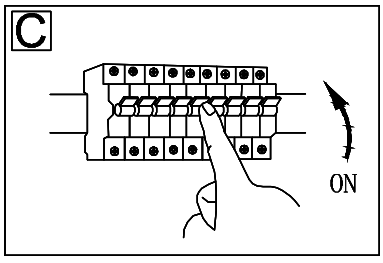

1x MAX 15W LED E27
230V~ 50Hz

GLOBO Handels GmbH
Gewerbestrasse 3
A-9184 Sankt Peter, Austria
www.globo-lighting.com
office@globo-lighting.com