

GLOBO
LIGHTING

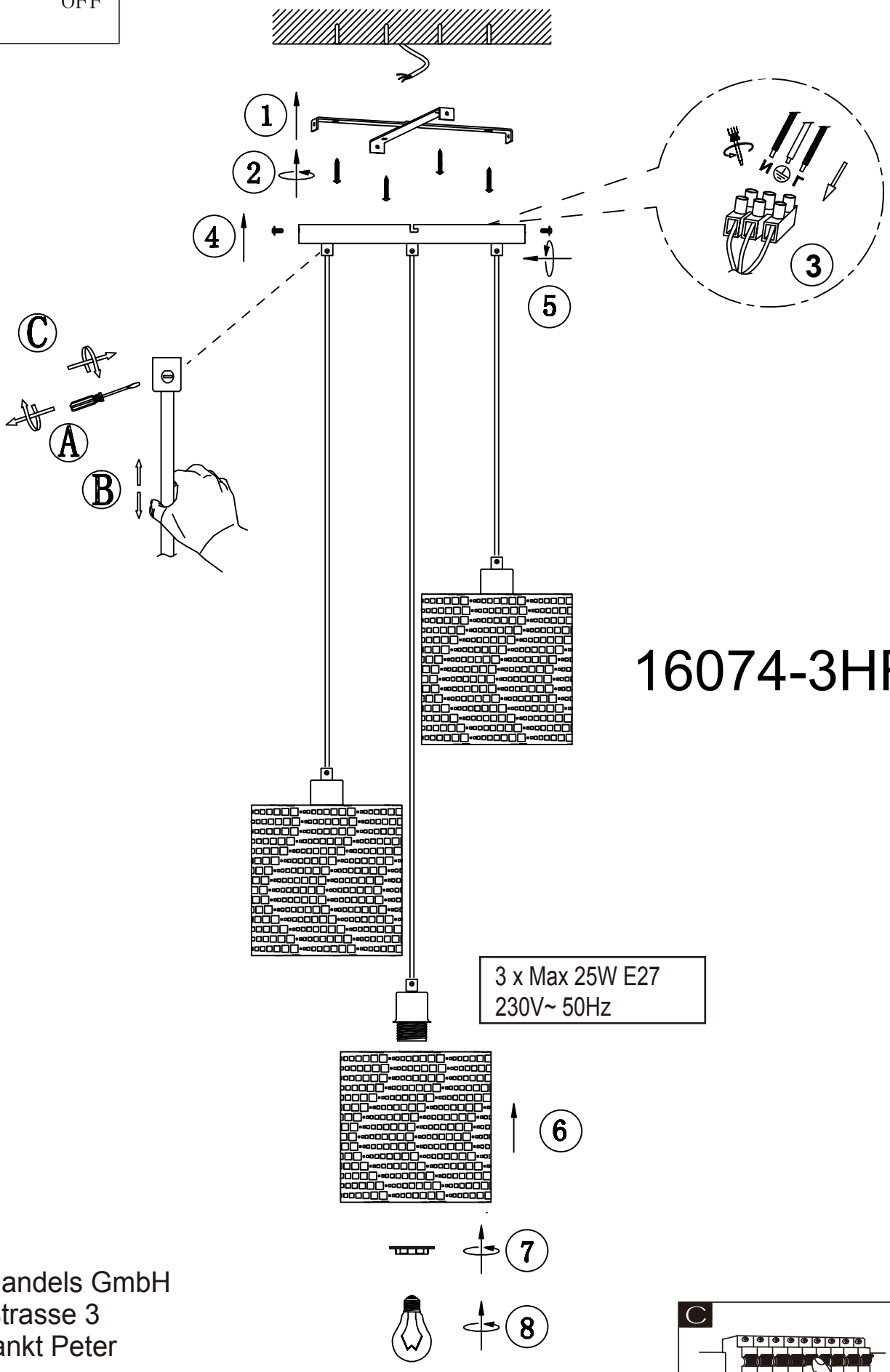

16074-3HR

3 x Max 25W E27
230V~ 50Hz

GLOBO Handels GmbH
Gewerbestrasse 3
A-9184 Sankt Peter
Austria
www.globo-lighting.com
office@globo-lighting.com

