GLOBO Handels GmbH
Gewerbestrasse 3
A-9184 Sankt Peter,AUSTRIA
www.globo-lighting.com
office@globo-lighting.com

GLOBO LIGHTING

16090-3DSG

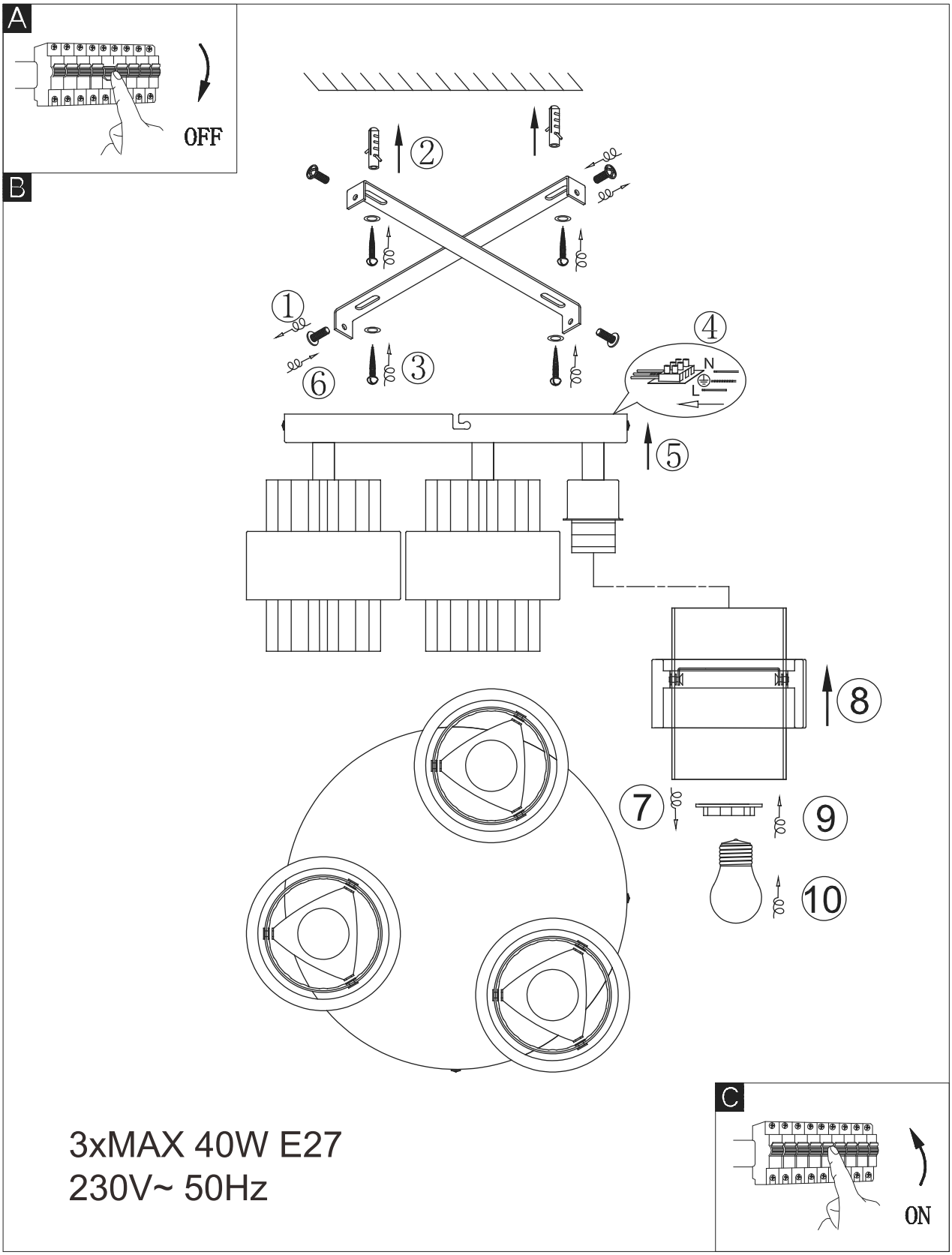

3xMAX 40W E27
230V~ 50Hz