GLOBO Handels GmbH
Gewerbestrasse 3
A-9184 Sankt Peter,AUSTRIA
www.globo-lighting.com
office@globo-lighting.com

GLOBO LIGHTING

16090-5HSG

A

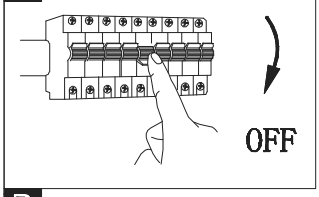

B

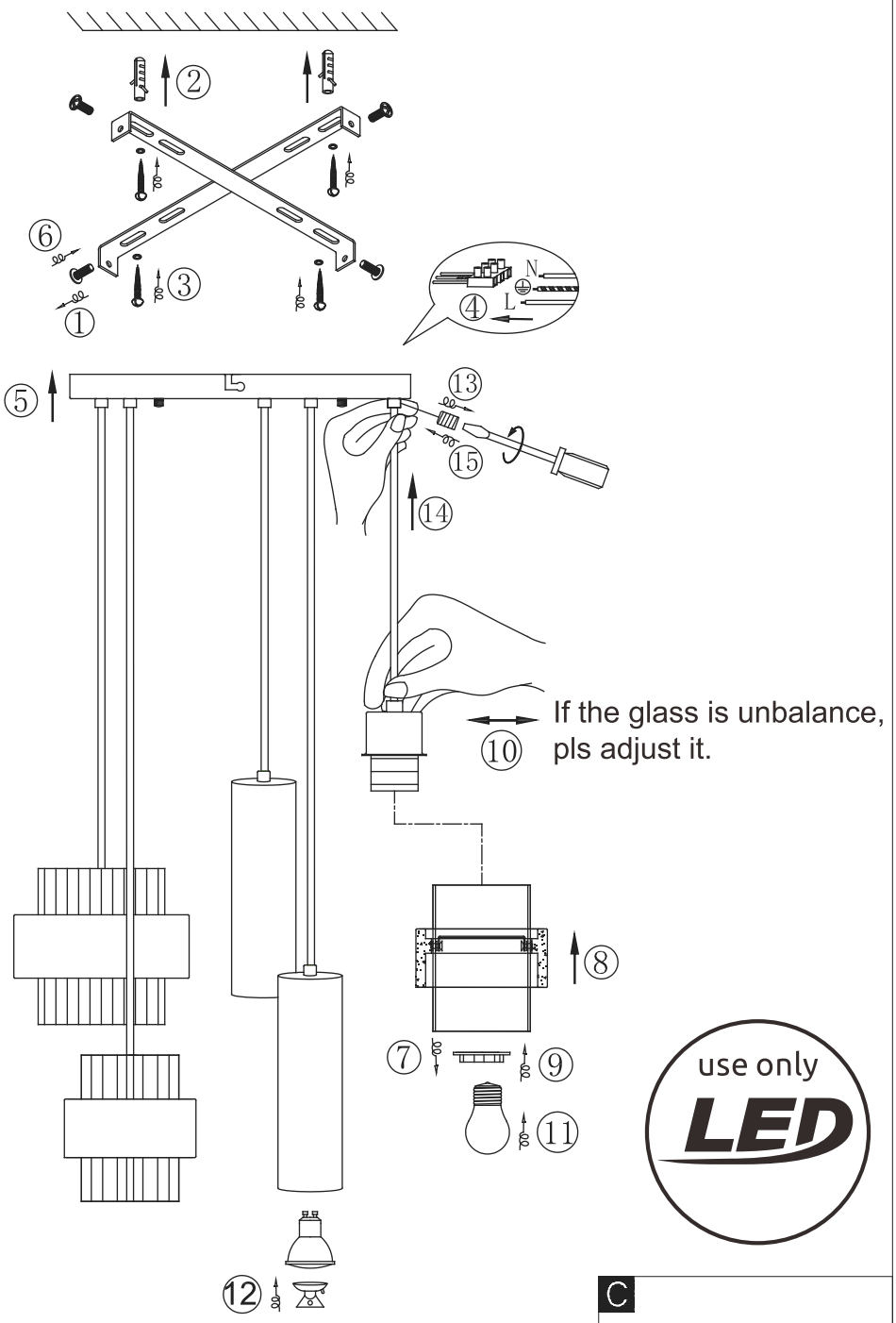

use only LED

C

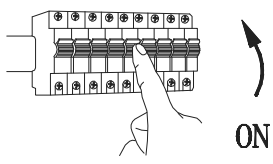

3xMAX 40W E27 230V~ 50Hz
2xMAX 10W GU10 LED 230V~ 50Hz