GLOBO
LIGHTING

16466-4

A

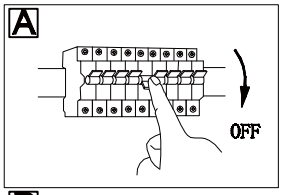

B

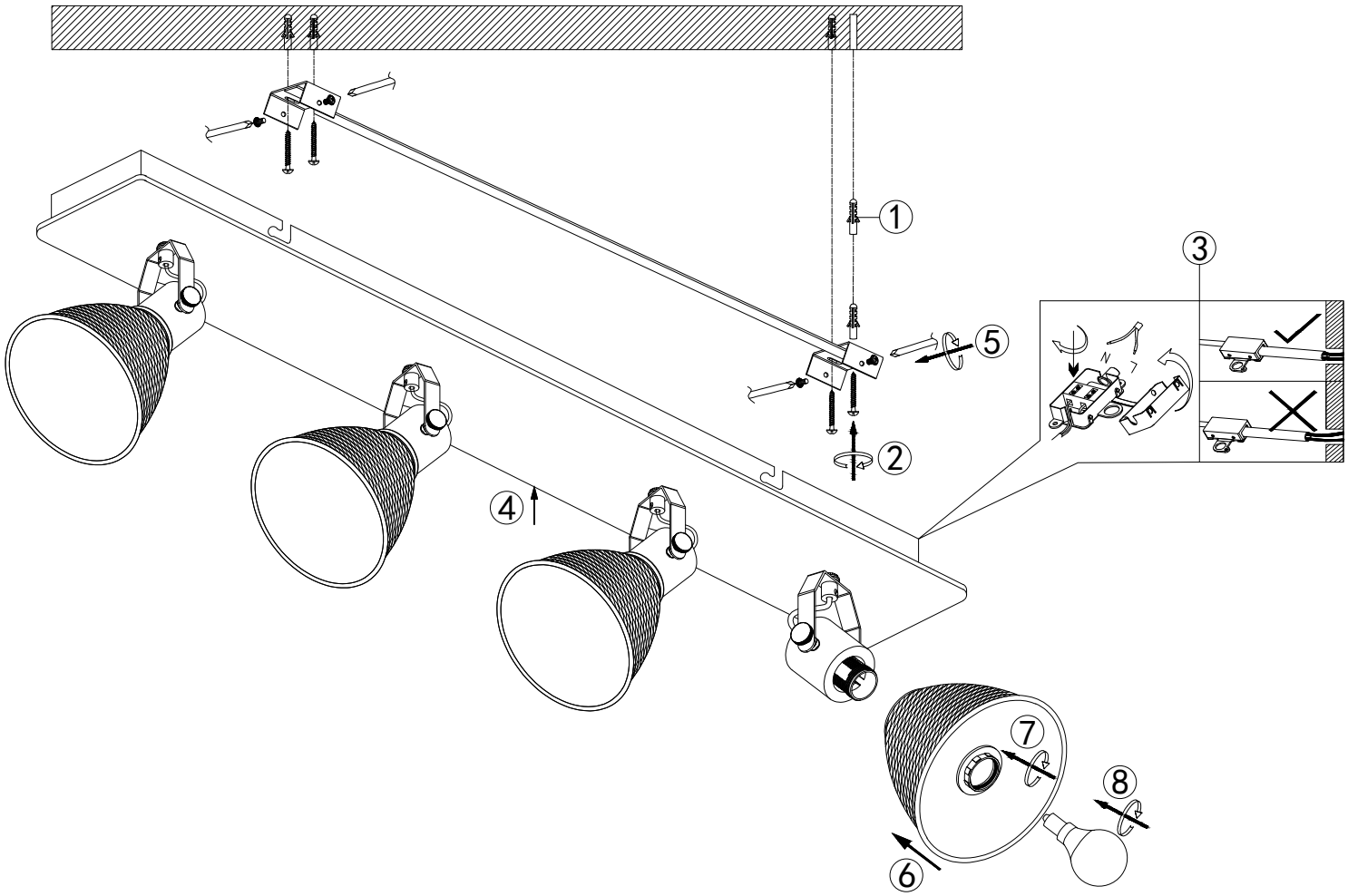

4x MAX 40W E14
220-240V~ 50Hz

C

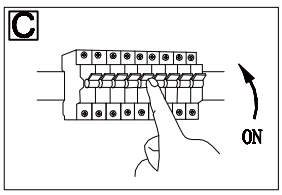

GLOBO Handels GmbH
Gewerbestrasse 3, A-9184 Sankt Peter, AUSTRIA
www.globo-lighting.com | office@globo-lighting.com