GLOBO
LIGHTING

28104-3T

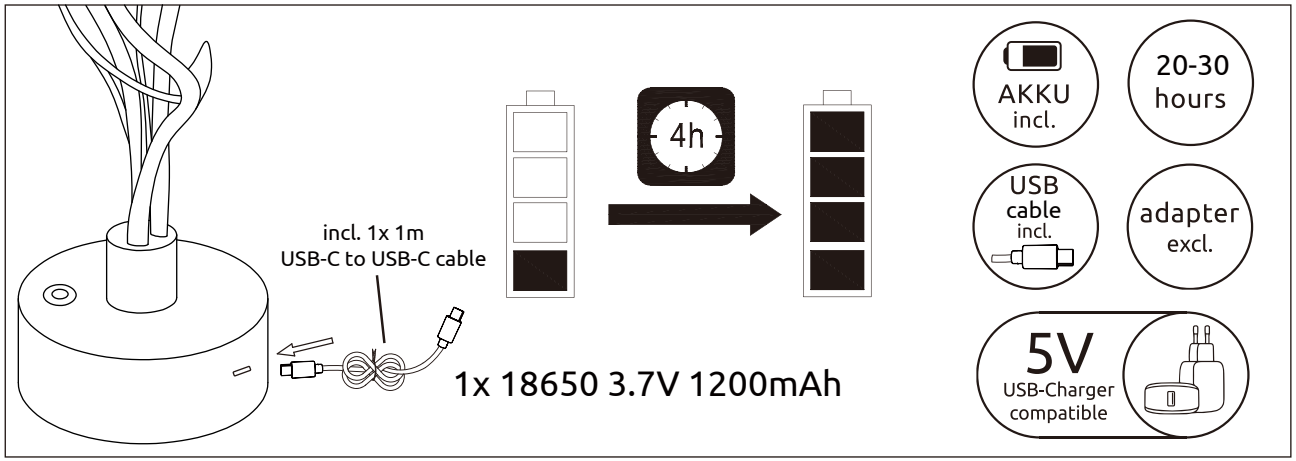

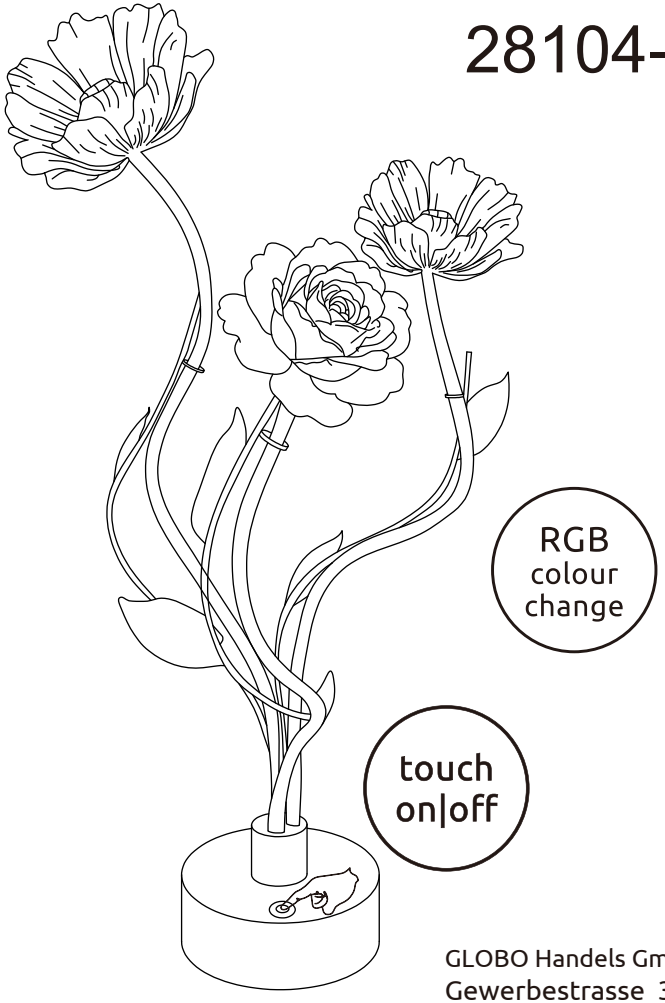

Battery Replacement Instructions: / Anleitung zum Akkuwechsel:

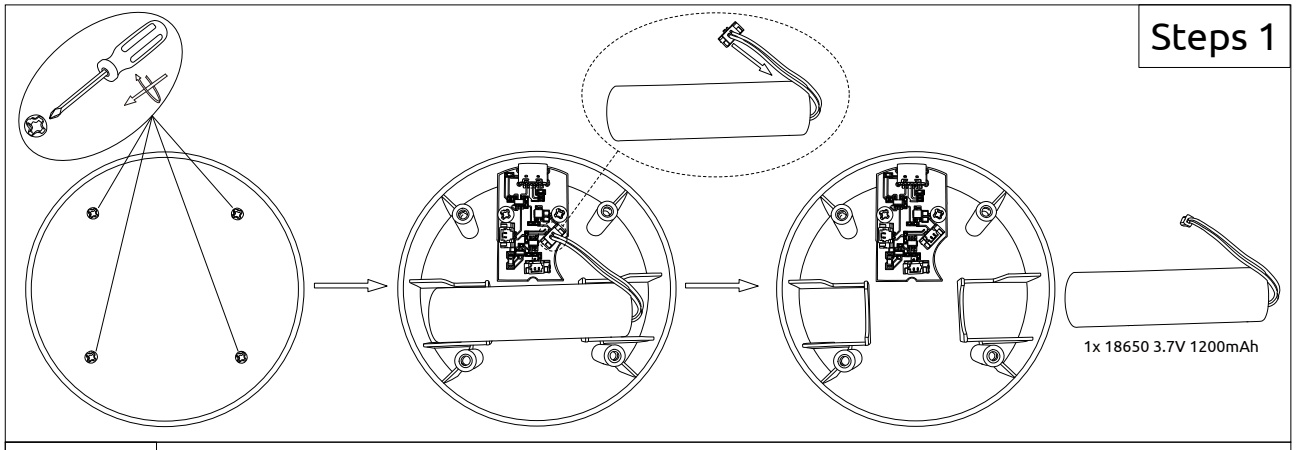

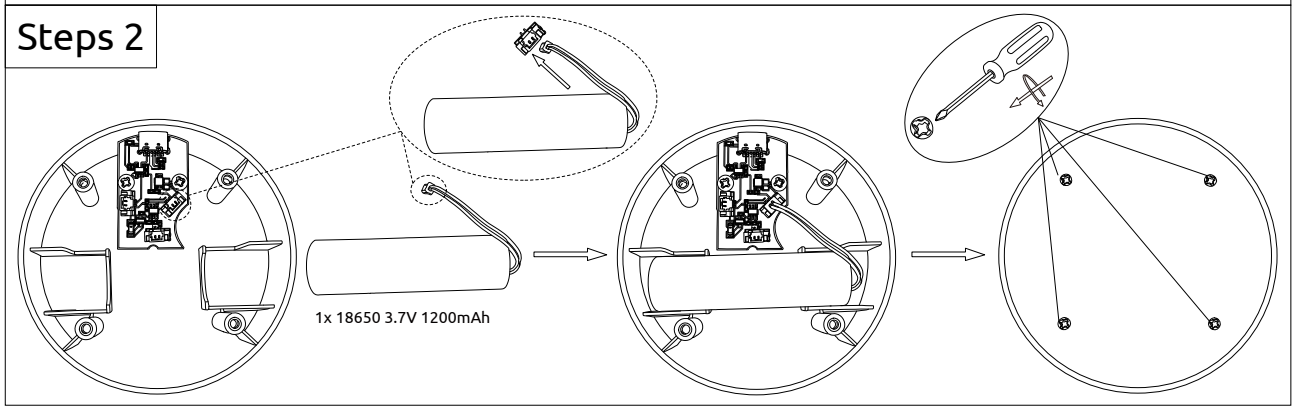

3x LED RGB 0.06W 5V
220-240V~ 50/60Hz

GLOBO Handels GmbH
Gewerbestrasse 3
A-9184 Sankt Peter,Austria
www.globo-lighting.com
office@globo-lighting.com

AKKU DATA

1x IMR18650 Lithium-ion Cell RECHARGEABLE
*Manufacturer: Henan Hengyi lithium energy technology Co.,Ltd
Address: Building 3,Xinhua District Industrial Park,Longmen Avenue,
Xinhua District,Pingdingshan City,Henan Province
Model: 18650 3.7V 1200mAh

SAFETY INSTRUCTIONS

