210x148.5mm

GLOBO LIGHTING

33414Q-6
8619 8232

1

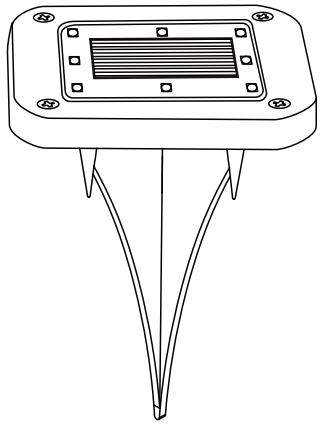

2 8x max 0.1W 3V LED

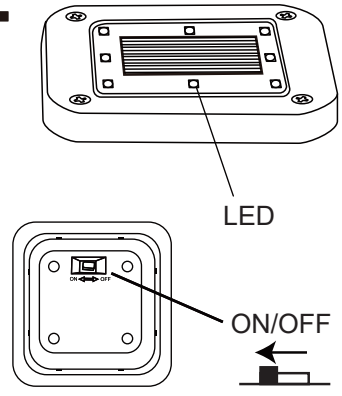

3

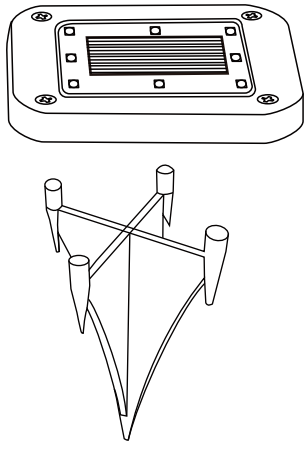

4 Battery Replacement Instructions: /
Anleitung zum Akkuwechsel:

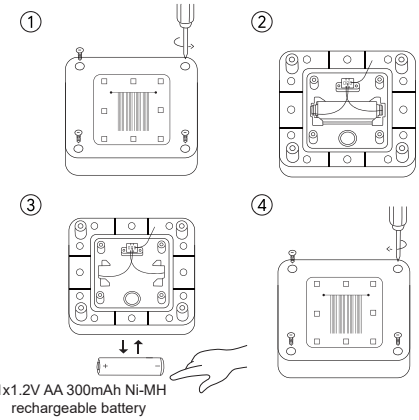

1x1.2V AA 300mAh Ni-MH
rechargeable battery

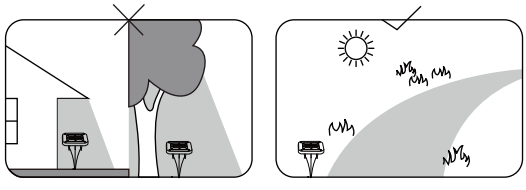

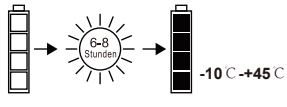

LED | SOLAR | ~6-8 hours | IP44 | AKKU incl.

Globo Handels GmbH
Gewerbestraße 3
9184 St. Peter
AUSTRIA
www.globo-lighting.com
office@globo-lighting.com

130x50mm battery safety instructions
电池安全说明书，白底黑字印刷

AKKU DATA

AA Ni-MH RECHARGEABLE

*Manufacturer: HUIXIAN SUNRISE POWER SOURCE CO., LTD
Address: West Soukelou, Huqiao, Huixian City Henan China
Model: Ni-MH AA 300mAh 1,2V; LOT: 2026/07

SAFETY INSTRUCTIONS

