IM(installation manual)

148.5x210mm

GLOBO LIGHTING

33536-5

1

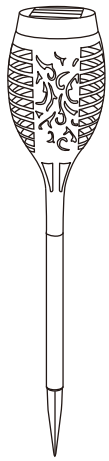

2 12 x max 0.1W 3V LED

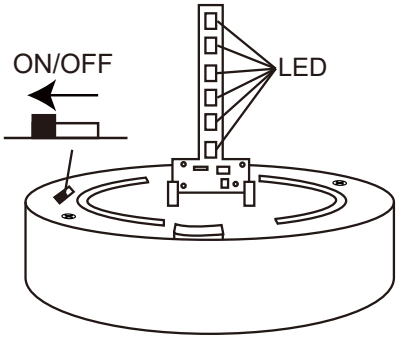

3

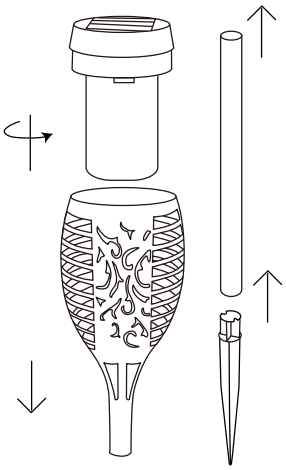

4 Anleitung zum Akkuwechsel: /
Battery Replacement Instructions:

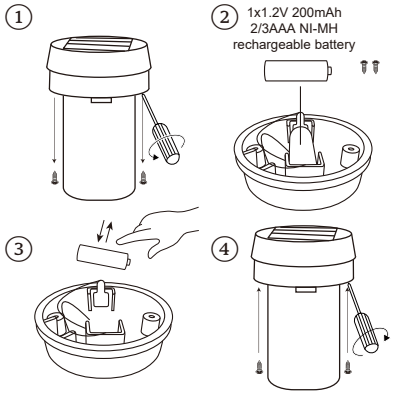

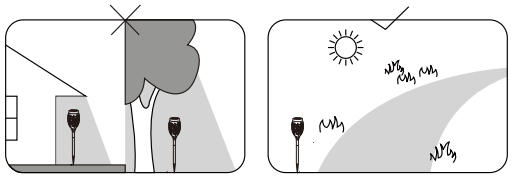

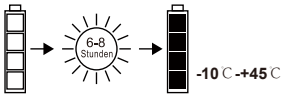

LED SOLAR ~6-8 hours fire effect IP44 AKKU incl.

GLOBO Handels GmbH
Gewerbestrasse 3
A-9184 Sankt Peter
AUSTRIA
www.globo-lighting.com
office@globo-lighting.com

130x50mm battery safety instructions
电池安全说明书，白底黑字印刷

AKKU DATA

2/3AAA Ni-MH RECHARGEABLE

*Manufacturer: XINXIANG CHENXIN POWER SUPPLY CO.,LTD.
Address: ZHONGMAFANG INDUSTRIAL PARK IN MUYE
DISTRICT XINXIANG CITY HENAN PROVINCE

Model: Ni-MH 2/3AAA 200mAh 1,2V; Lot:2026/10

SAFETY INSTRUCTIONS

