IM(installation manual)

148.5x210mm

GLOBO
LIGHTING

33536-5
1018 1149

1

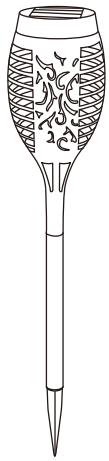

2 12 x max 0.1W 3V LED

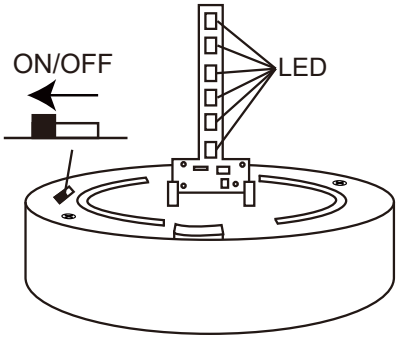

3

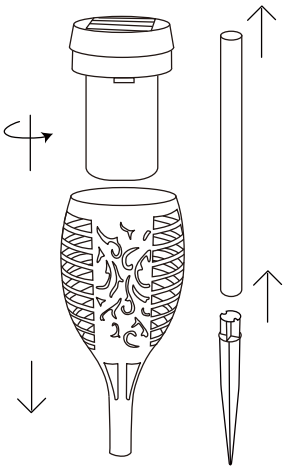

4 Battery Replacement Instructions:/
Anleitung zum Akkuwechsel:

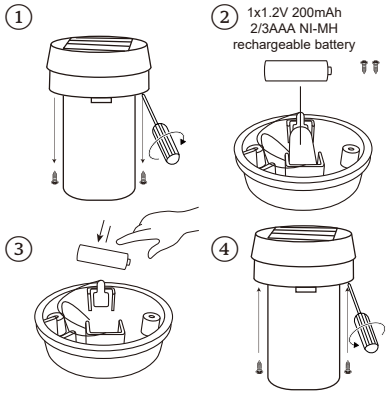

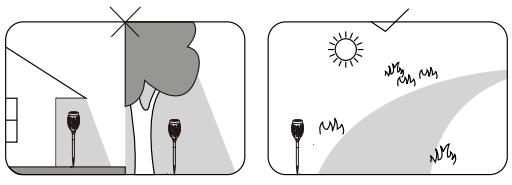

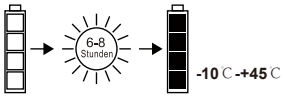

LED SOLAR ~6-8 hours IP44 AKKU incl.

Globo Handels GmbH
Gewerbestraße 3
9184 St. Peter
AUSTRIA
www.globo-lighting.com
office@globo-lighting.com

130x50mm battery safety instructions
电池安全说明书，白底黑字印刷

AKKU DATA

2/3AAA Ni-MH RECHARGEABLE

*Manufacturer: XINXIANG CHENXIN POWER SUPPLY CO.,LTD.
Address: ZHONGMAFANG INDUSTRIAL PARK IN MUYE DISTRICT XINXIANG CITY HENAN PROVINCE
Model: Ni-MH 2/3AAA 200mAh 1,2V; LOT:2026/09

SAFETY INSTRUCTIONS

