GLOBO
LIGHTING

33577-3

1

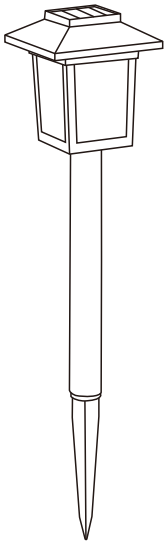

2 10x max 0.1W 3V LED

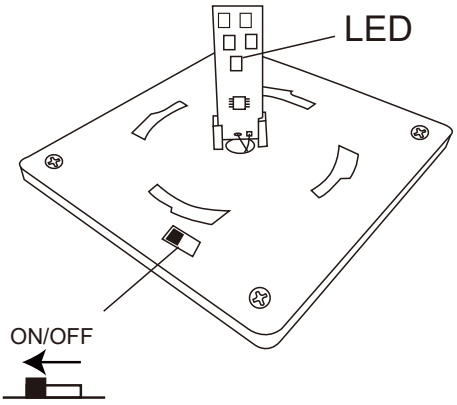

3

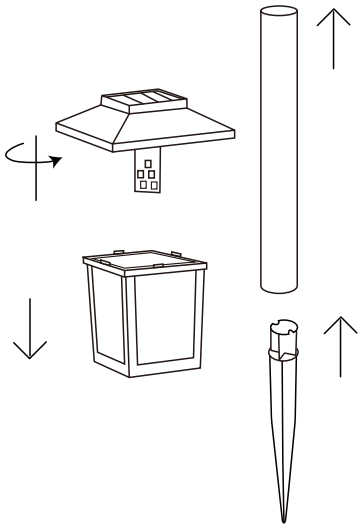

4 Anleitung zum Akkuwechsel /
Battery Replacement Instructions:

1x1.2V 200mAh
AAA NI-MH rechargeable battery

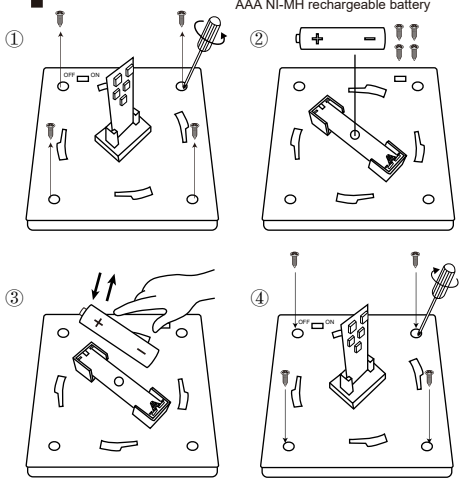

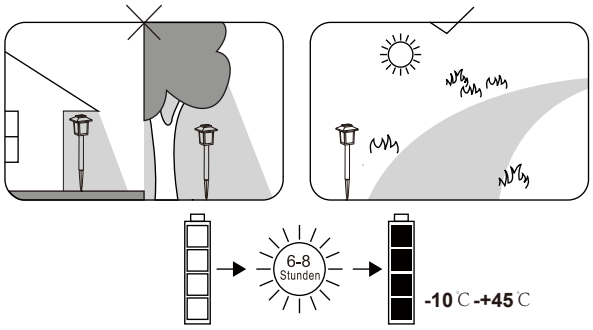

LED SOLAR ~6-8 hours IP44 AKKU incl.

GLOBO Handels GmbH
Gewerbestrasse 3
A-9184 Sankt Peter
AUSTRIA
www.globo-lighting.com
office@globo-lighting.com

130x50mm battery safety instructions
电池安全说明书，白底黑字印刷

AKKU DATA

AAA Ni-MH RECHARGEABLE

*Manufacturer: HENAN TROILY NEW TECHNOLOGY CO.,LTD
Address: Industrial Cluster District of Yudong,Xinxiang, Henan 453000, China
Model: Ni-MH AAA 200mAh 1,2V; LOT:2026-09

SAFETY INSTRUCTIONS

