GLOBO LIGHTING

33770-3/2764 0838

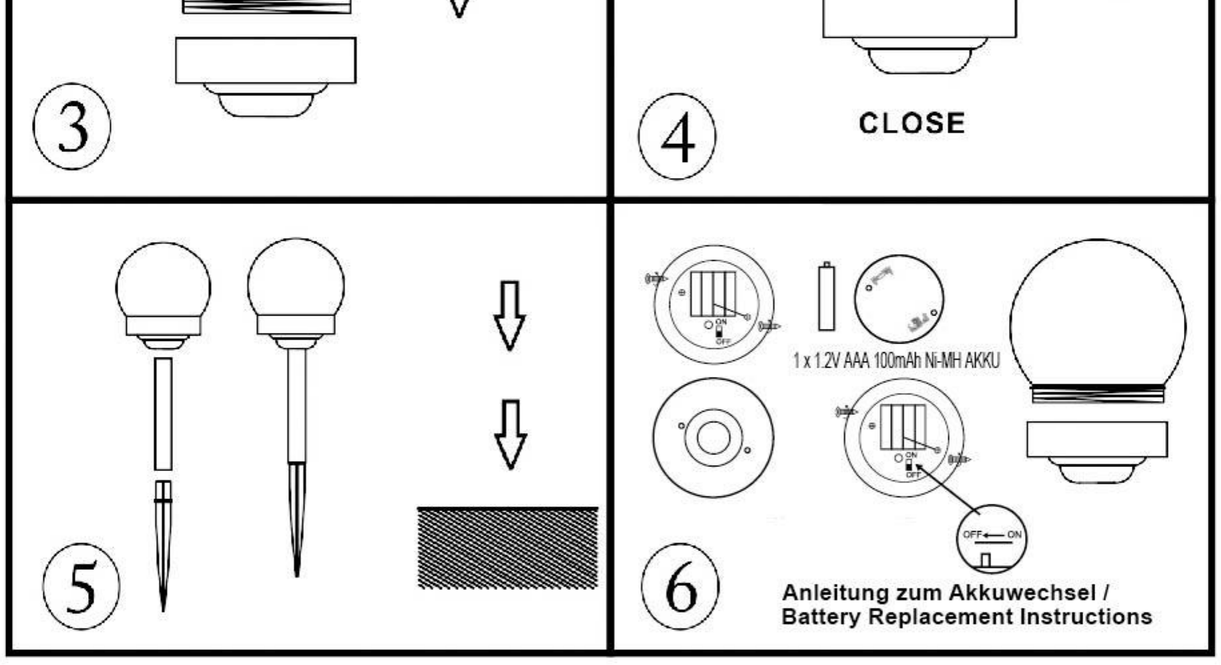

AKKU DATA

AAA Ni-MH RECHARGEABLE

*Manufacturer:XINXIANG CITY HENGQIANG NEW ENERGY CO.,LTD

Address: DAKUAI INDUSTRIAL ZONE,DAKUAI TOWN,FENGQUAN DISTRICT, XINXIANG CITY,HENAN,CHINA

Model: Ni-MH AAA 100mAh 1,2V

SAFETY INSTRUCTIONS

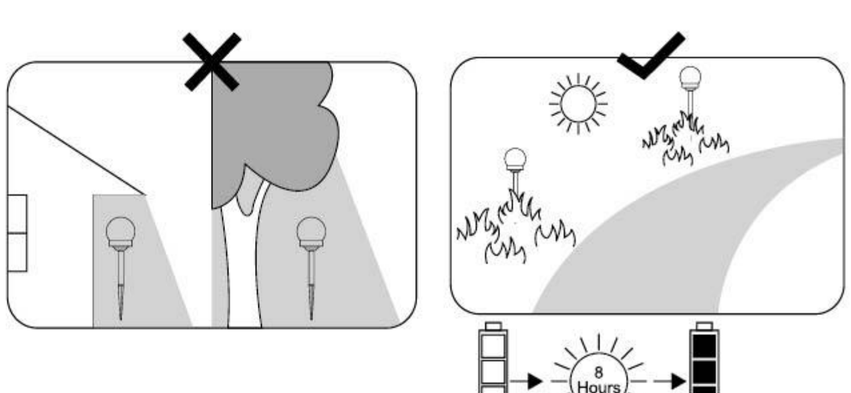

solar | IP44 | 6~8 hours | AKKU incl. | LED

GLOBO Handels GmbH

Gewerbestrasse 3

A-9184 Sankt Peter

AUSTRIA

office@globo-lighting.com

www.globo-lighting.com