GLOBO
LIGHTING

36021

Option A:

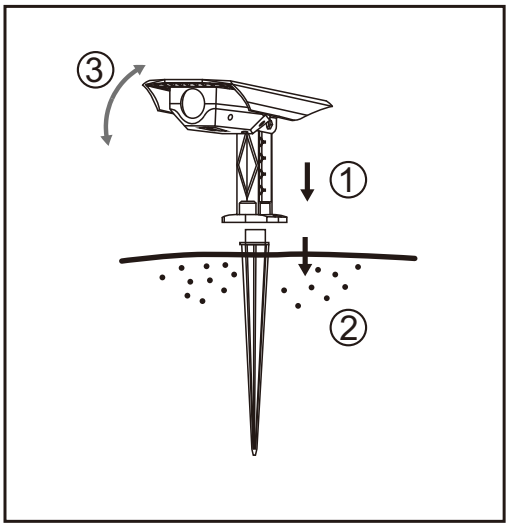

Option B:

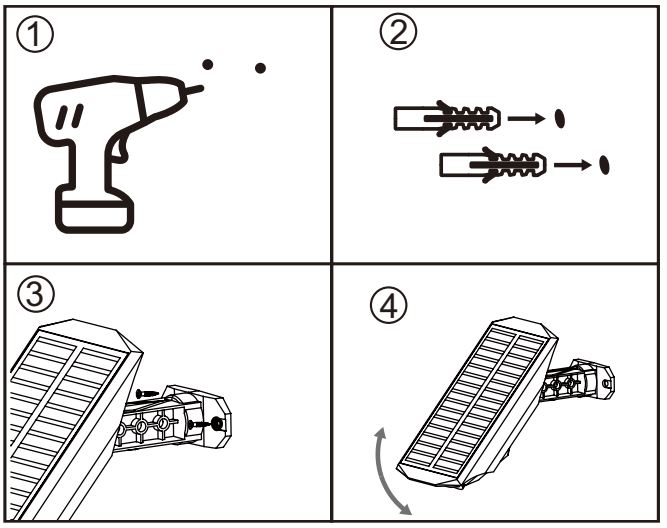

Anleitung zum Akkuwechsel / Battery Replacement Instructions:

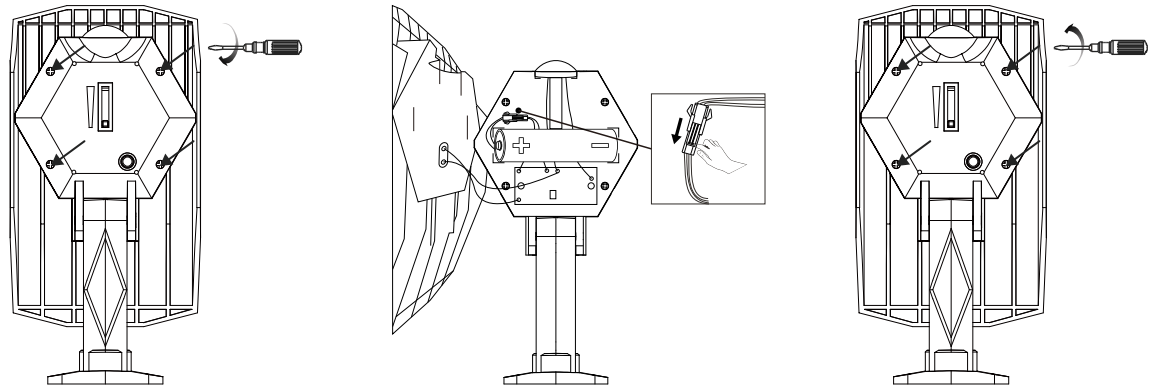

incl. 1x3.7V, 1800mAh Li-ion battery, 1x 1W, 3V LED

AKKU DATA

18650 Lithium-ion RECHARGEABLE

Jiang Xi Cheng jiang new energy Co., Ltd
Address: Zhongcheng Industrial Park, Wuning County Industrial Park
Jiujiang City, Jiangxi Province, China
Model:INR18650-1800mAh

SAFTY INSTRUCTIONS



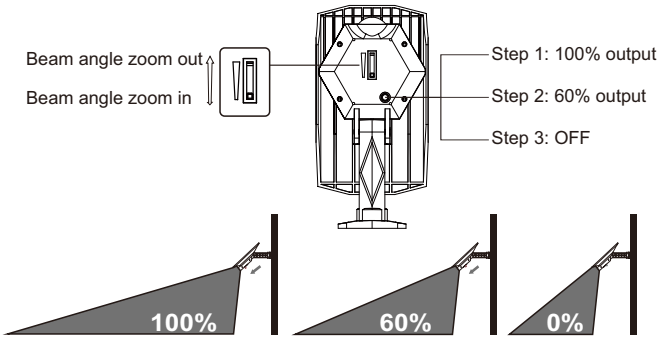

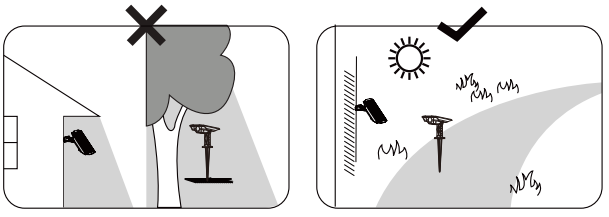

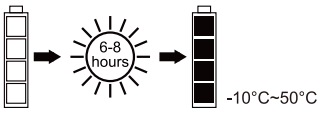

LED | AKKU incl. | IP44 | ~8-10 hours | SOLAR

GLOBO Handels GmbH
Gewerbestrasse 3
A-9184 Sankt Peter,Austria
www.globo-lighting.com
office@globo-lighting.com