IM(installation manual)

GLOBO LIGHTING

36135-6

1

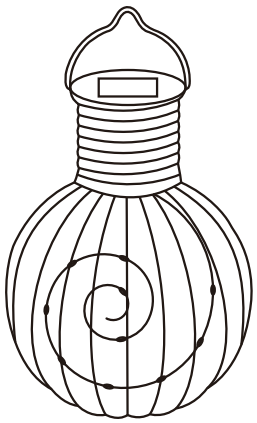

2

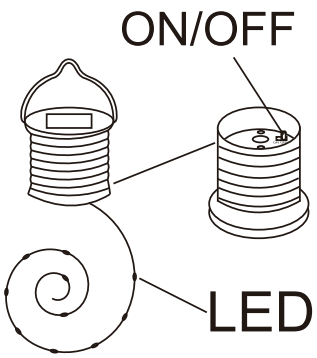

10x max 0.06W LED 3.2V

3

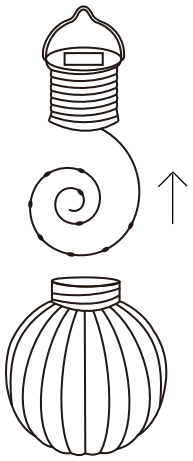

4 Battery Replacement Instructions: /
Anleitung zum Akkuwechsel:

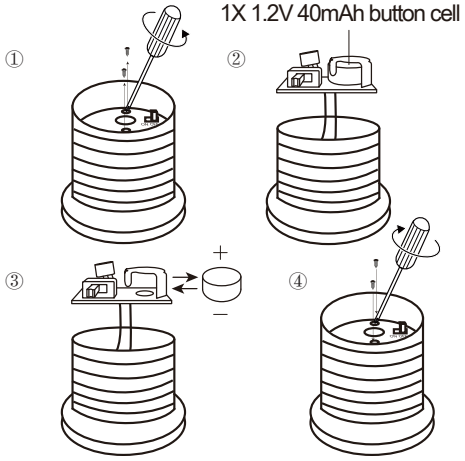

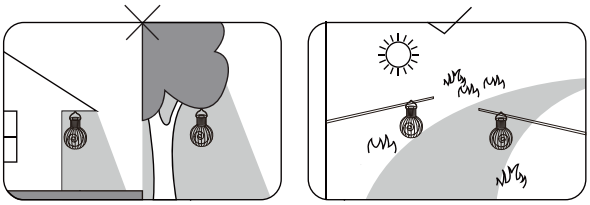

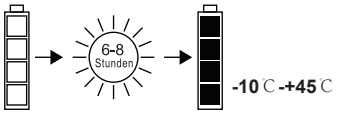

LED | SOLAR | ~6-8 hours | IP44 | AKKU incl.

GLOBO Handels GmbH
Gewerbestrasse 3
A-9184 Sankt Peter
AUSTRIA
www.globo-lighting.com
office@globo-lighting.com

130x50mm battery safety instructions
电池安全说明书，白底黑字印刷

AKKU DATA

AA Ni-MH RECHARGEABLE

*Manufacturer: HENAN TROILY NEW ENERGY TECHNOLOGY CO., LTD.
Address: Industrial Cluster District of Yudong, Xinxiang, Henan China
Model: Ni-MH button cell 40mAh 1,2V 2026/09

SAFETY INSTRUCTIONS

