21X14.5CM

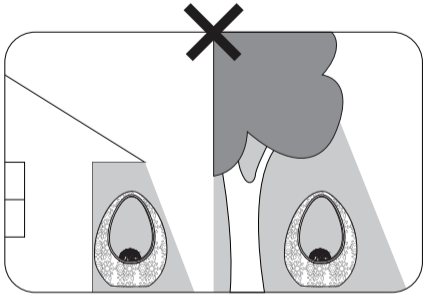

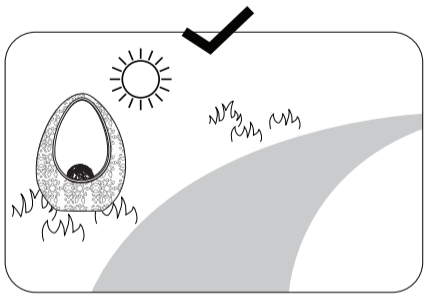

AKKU DATA
NI-MH RECHARGEABLE
*Manufacturer: Xinxiang BOYAN Power Supply Co.,Ltd.
Adress: Xinchaodaguanyuan,Huixian City,Xinxiang,Henan,China
Model: NI-MH AA 200mAh 1.2V Lot no:2026.09

SAFETY INSTRUCTIONS



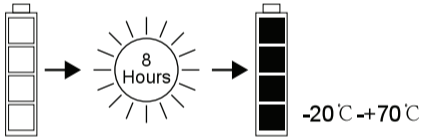

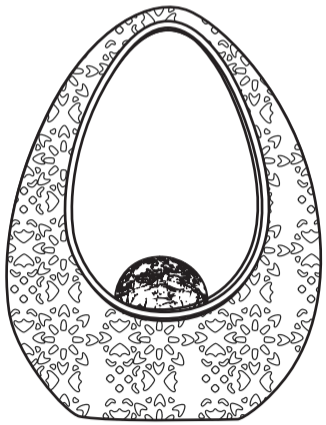

Battery Replacement Instructions:
/ Anleitung zum Akkuwechsel

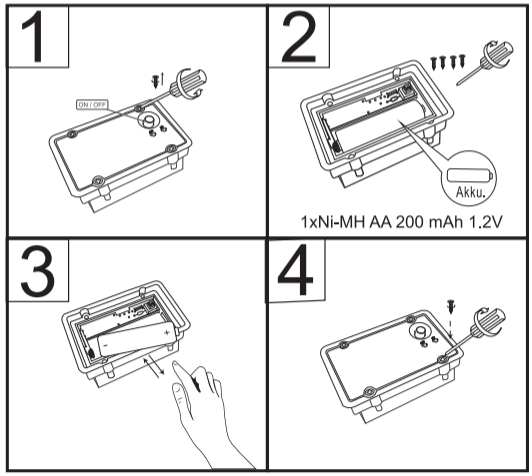

GLOBO LIGHTING Art:36528

GLOBO Handels GmbH Gewerbestrasse 3 A-9184 Sankt Peter, AUSTRIA
www.globo-lighting.com | office@globo-lighting.com

