GLOBO
LIGHTING

36662

1



2

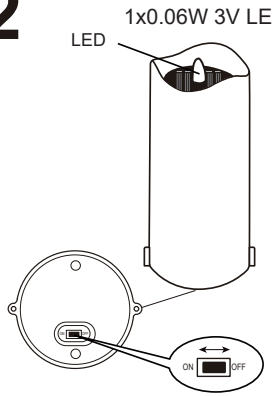

3

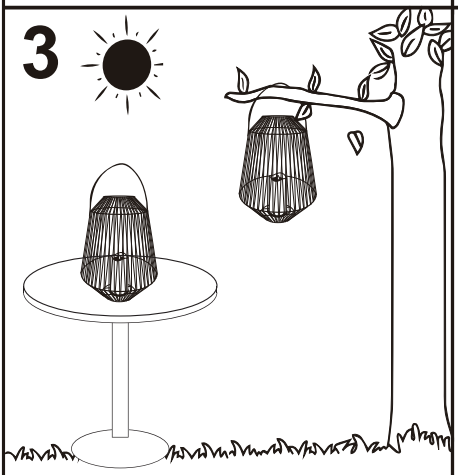

4 Anleitung zum Akkuwechsel:
Battery Replacement Instructions:

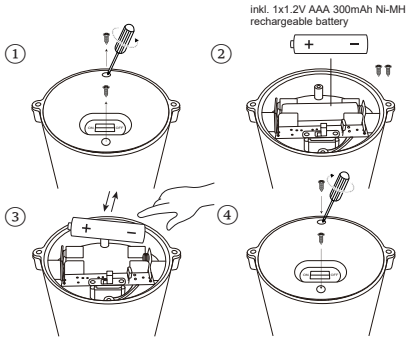

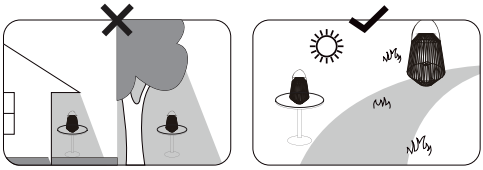

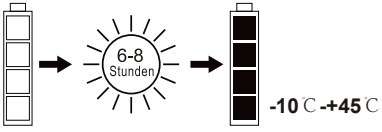

LED · SOLAR · ~6-8 hours · fire effect · IP44 · AKKU incl.

GLOBO Handels GmbH
Gewerbestrasse 3
A-9184 Sankt Peter
AUSTRIA
www.globo-lighting.com
office@globo-lighting.com

130x50mm battery safety instructions
电池安全说明书，白底黑字印刷

AKKU DATA

AAA Ni-MH RECHARGEABLE

*Manufacturer: XINXIANG BOYAN POWER SUPPLY CO., LTD.
Address: 1380, Bldg A1, Fengshengheyuan, Huixian, Henan,China
Model: Ni-MH AAA 300mAh 1,2V; LOT: 2026/10

SAFETY INSTRUCTIONS

