GLOBO
FAN

0438S/0438SA

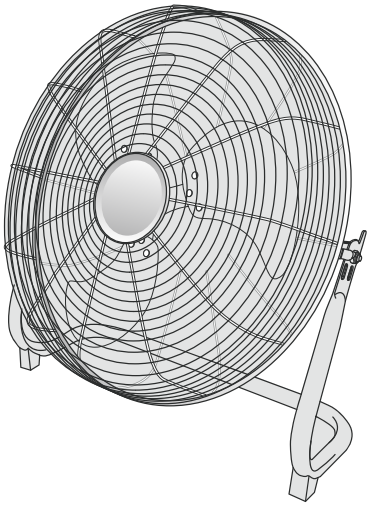

220-240V~50/60Hz 45W

GLOBO Handels GmbH
Gewerbestrasse 3
A-9184 Sankt Peter
Austria
www.globo-lighting.com
office@globo-lighting.com

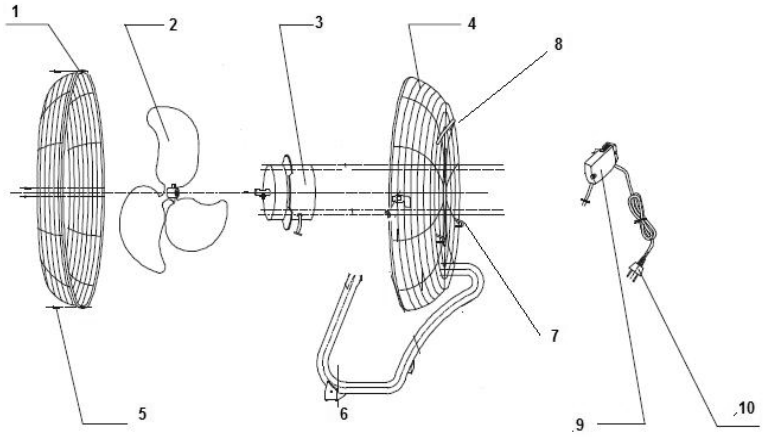

1. Front grille	2. Fan blade
3. Motor	4. Rear grille
5. Screw	6. Base
7. Hook (for cord storage)	8. Handle
9. Switch box	10. Supply cord with plug

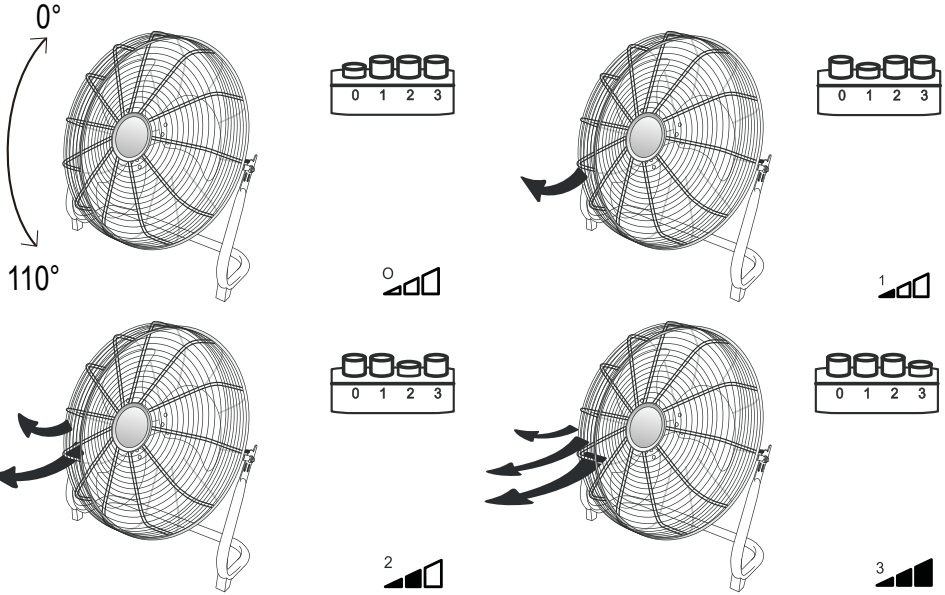

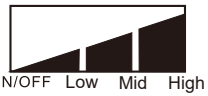

Low-850 rpm/min
Mid-1000 rpm/min
High-1200 rpm/min