A



GLOBO
LIGHTING

54115-4

B

use only LED

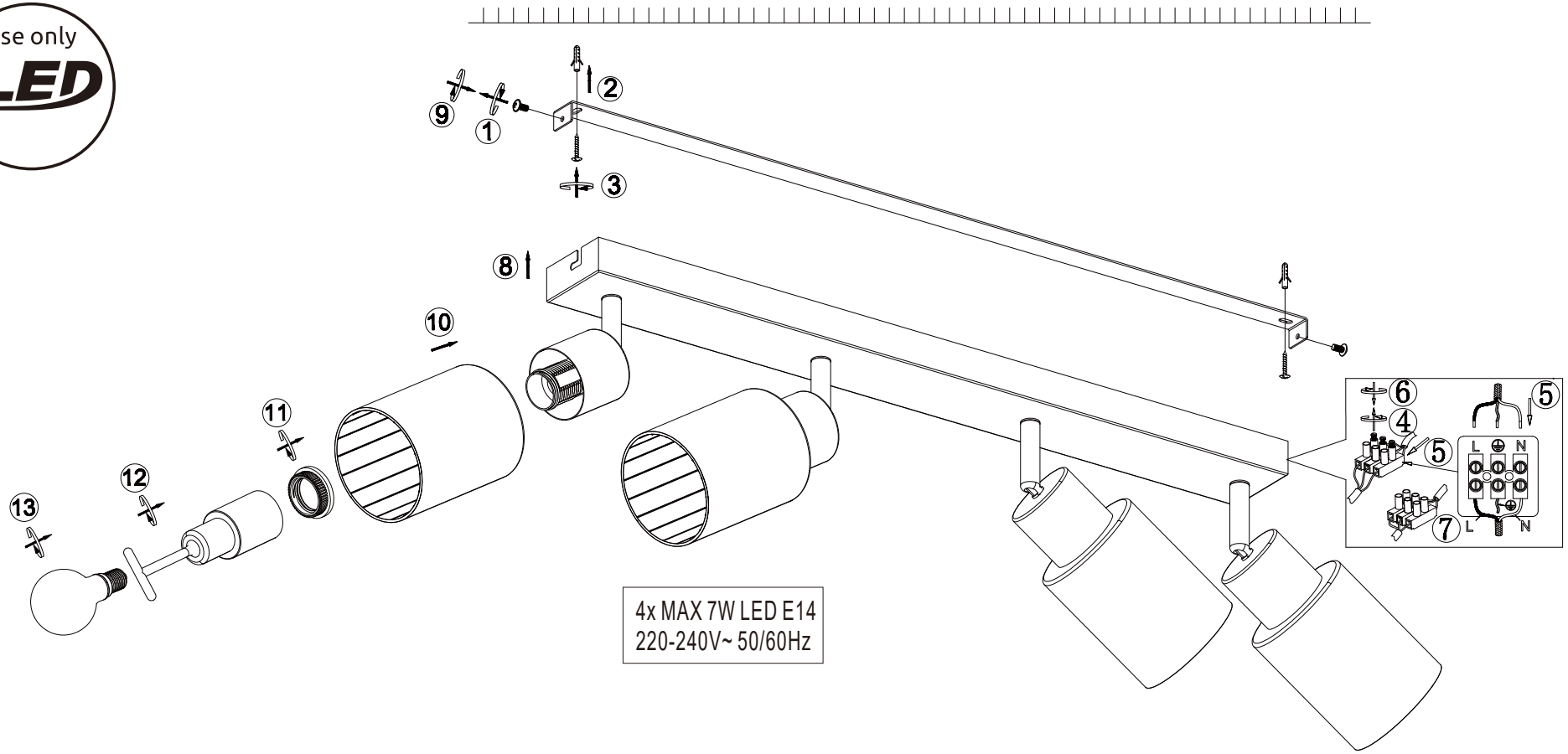

GLOBO Handels GmbH
Gewerbestrasse 3
A-9184 Sankt Peter
Austria
www.globo-lighting.com
office@globo-lighting.com

C

