GLOBO
LIGHTING

A

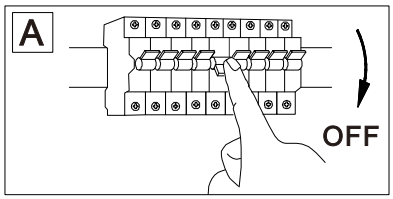

64144-2W

B

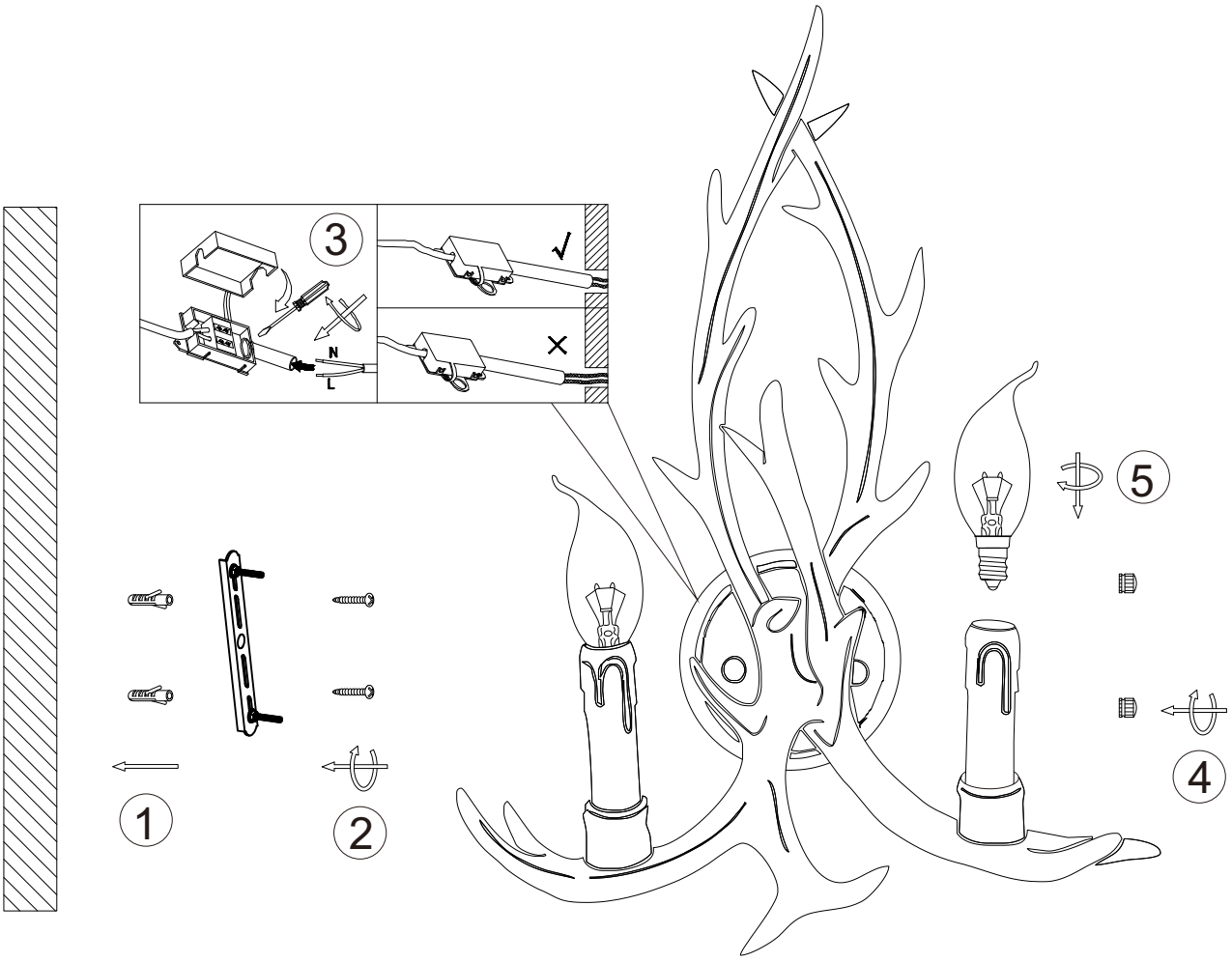

excl.2x MAX 40W E14
220-240V~ 50/60Hz

C

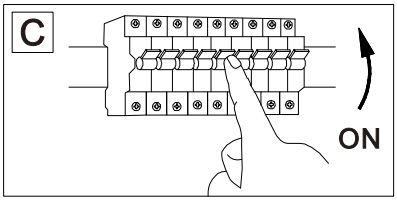

GLOBO Handels GmbH
Gewerbestrasse 3,A-9184 Sankt Peter Austria
www.globo-lighting.com office@globo-lighting.com