Dining Table

B402234-20G
B402234-43G
B402234-3G

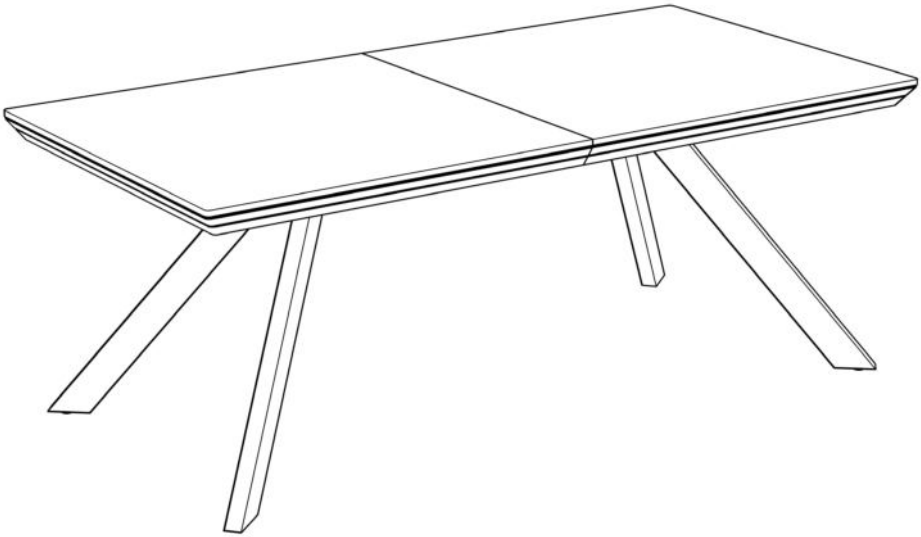

best home products Handels GmbH
ADD: Gewerbestrasse 3, 9184 Sankt Peter, Austria
WEB: www.bhp-interior.com
office@bhp-austria.com

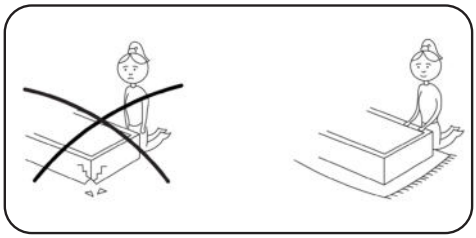

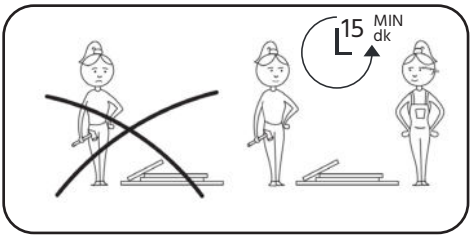



ACCESSORIES



a x 1 b x 16 c x 4

1

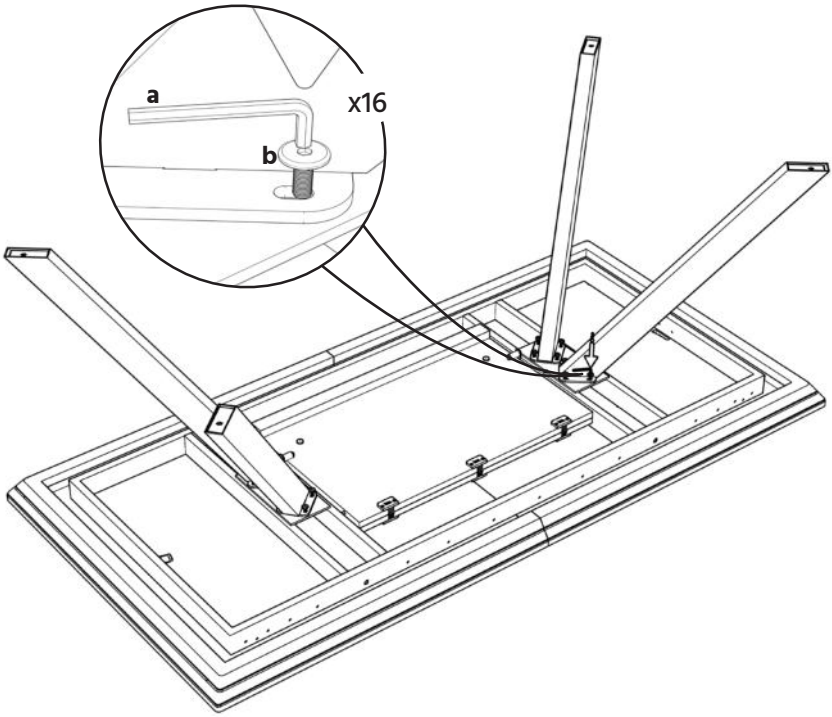

2

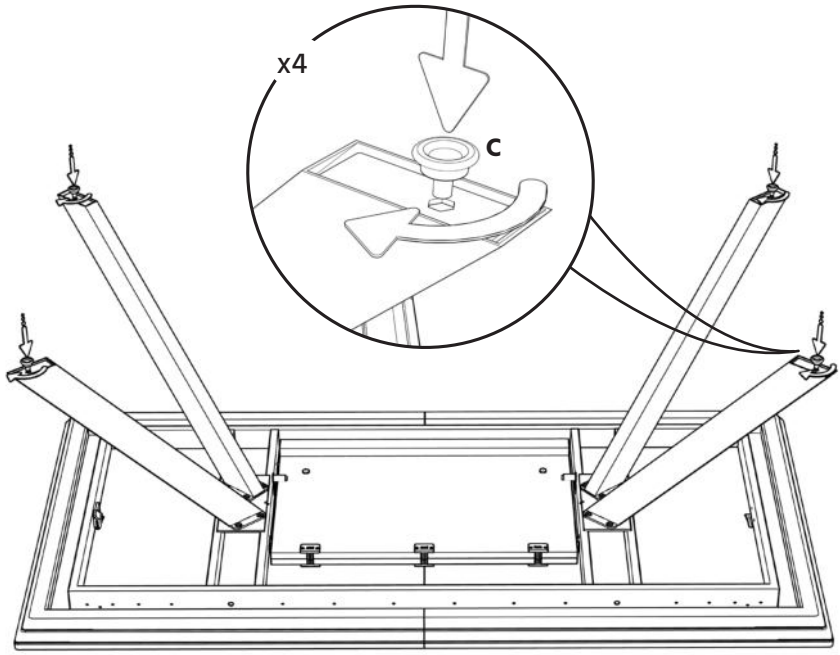

3



4



5

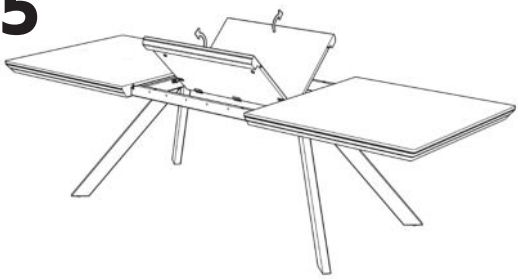

6



7



8

